MOTORE RR-4T 250-400-450-525CC
ENGINE, RR-4T 250-400-450-525CC
MOTEUR RR-4T 250-400-450-525CC
MOTOR, RR-4T 250-400-450-525CC
MOTOR, RR-4T 250-400-450-525CC

TAV. 1	- CARTER MOTORE - ENGINE CASE - CARTER	- MOTORGEHÄUSE - CARTER	TAV. 2	- ALBERO MOTORE E PISTONE - CRANKSHAFT - PISTON - VILEBREQUIN ET PISTON	- KURBELWELLE - KOLBEN - CIGUENAL Y PYSTON	TAV. 3	- ALBERO MOTORE E PISTONE - CRANKSHAFT - PISTON - VILEBREQUIN ET PISTON	- KURBELWELLE - KOLBEN - CIGUENAL Y PYSTON
250-400-450-525CC	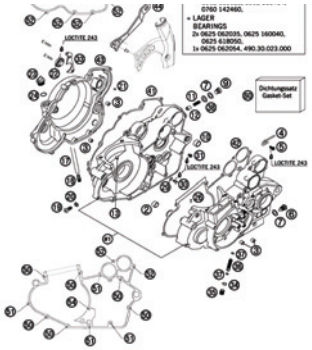		250CC	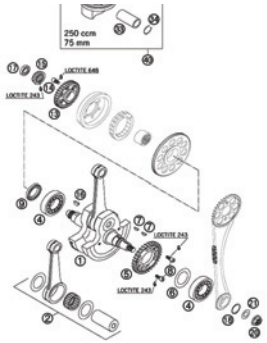		400CC	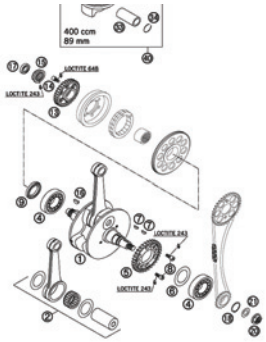	
TAV. 4	- ALBERO MOTORE E PISTONE - CRANKSHAFT - PISTON - VILEBREQUIN ET PISTON	- KURBELWELLE - KOLBEN - CIGUENAL Y PYSTON	TAV. 5	- ALBERO BILANCIAMENTO - BALANCER SHAFT - VILEBREQUIN BALANCER	- AUSGLEICHSWELLE - CIGUENAL BALANCA	TAV. 6	- CILINDRO - CYLINDER - CYLINDRE	- ZYLINDER - CILINDRO
450-525CC	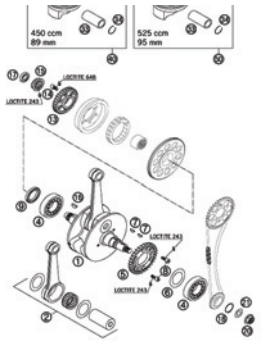		250-400-450-525CC	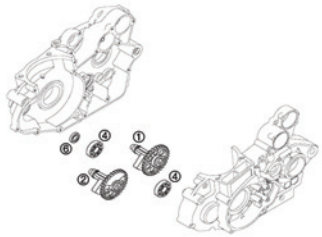		250-400-450-525CC	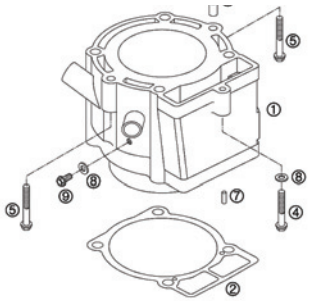	
TAV. 7	- TESTA - CYLINDER HEAD - CULASSE	- ZYLINDERKOPF - CULATA	TAV. 8	- ALBERO BILANCIAMENTO VALVOLE E VALVOLE - VALVE DRIVE - VILEBREQUIN BALANCER VALVES ET VALVES	- VENTILTRIEB - CIGUENAL BALANCA VÁLVULES Y VÁLVULES	TAV. 9	- ALBERO BILANCIAMENTO VALVOLE E VALVOLE - VALVE DRIVE - VILEBREQUIN BALANCER VALVES ET VALVES	- VENTILTRIEB - CIGUENAL BALANCA VÁLVULES Y VÁLVULES
250-400-450-525CC	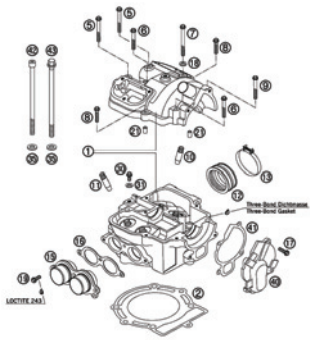		250CC	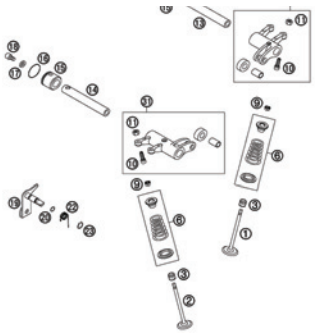		400-450-525CC	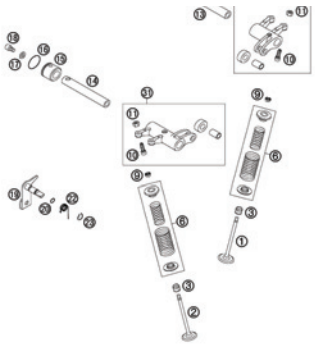	

TAV. 10 - CATENA DI DISTRIBUZIONE - STEUERTRIEB - TIMING VALVE - CADENA DISTRIBUCIÓN - CHAÎNE DE DISTRIBUTION

250-400-450-525CC

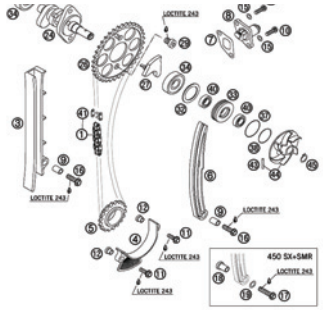

TAV. 11 - SISTEMA DI LUBRIFICAZIONE - SCHMIERSYSTEM - LUBRICATING SYSTEM - BOMBA DE ACEITE - POMPE À HUILE

250-400-450-525CC

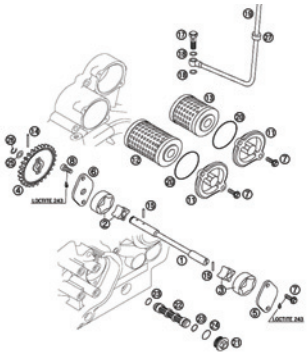

TAV. 12 - CARBURATORE FCR-MX37 - VERGASER, FCR-MX37 - CARBURETOR, FCR-MX37 - CARBURADOR FCR-MX37 - CARBURATEUR FCR-MX37

250CC

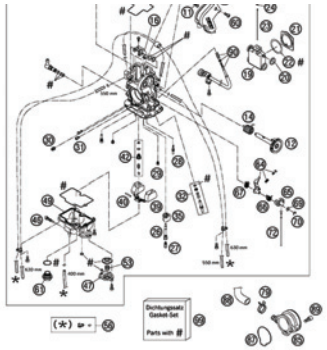

TAV. 13 - CARBURATORE FCR-MX39 - VERGASER, FCR-MX39 - CARBURETOR, FCR-MX39 - CARBURADOR FCR-MX39 - CARBURATEUR FCR-MX39

400-450-525CC

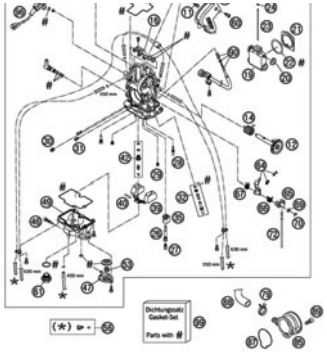

TAV. 14 - SISTEMA DI IGNEZIONE 4K3B - ZÜNDANLAGE 4K3B - IGNITION SYSTEM 4K3B - INSTALLACION ELECTRICA 4K3B - INSTALLATION ELECTRIQUE 4K3B

250-400-450-525CC

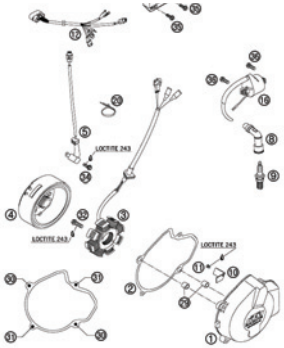

TAV. 15 - AVVIAMENTO ELETTRICO - ELEKTROSTARTER - ELECTRIC STARTER - ELECTRICA ARRANQUE - ELECTRIQUE DEMARRAGE

250-400-450-525CC

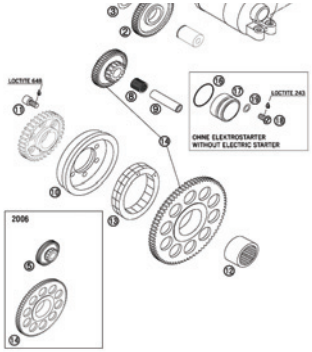

TAV. 16 - FRIZIONE - KUPPLUNG - CLUTCH - EMBRAGUE - EMBRAYAGE

250-400-450-525CC / 2005
250CC / 2006

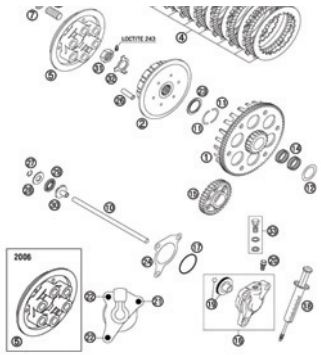

TAV. 16A - FRIZIONE - KUPPLUNG - CLUTCH - EMBRAGUE - EMBRAYAGE

400-450-525CC/2006

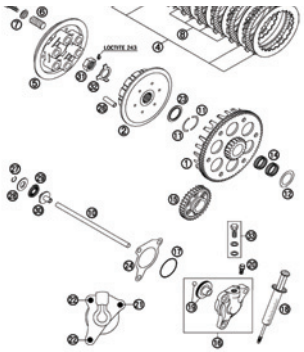

TAV. 17 - LEVA MESSA IN MOTO - KICKSTARTER - KICKSTARTER - ARRAQUE - DEMARRAGE

250-400-450-525CC

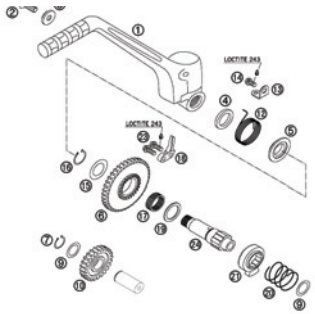

TAV. 18	- TRASMISSIONE PRIMARIA - TRANSMISSION I° - MAIN SHAFT - TRANSMISSION PRIMAIRE	- GETRIEBE I° - ANTRIEBSWELLE - TRANSMISSION I°	TAV. 19	- TRASMISSIONE PRIMARIA - TRANSMISSION I° - MAIN SHAFT - TRANSMISSION PRIMAIRE	- GETRIEBE I° - ANTRIEBSWELLE - TRANSMISSION I°	TAV. 20	- TRASMISSIONE SECONDARIA - TRANSMISSION II° - MAIN SHAFT - TRANSMISSION SECONDAIRE	- GETRIEBE II° - ANTRIEBSWELLE - TRANSMISSION II°
250CC	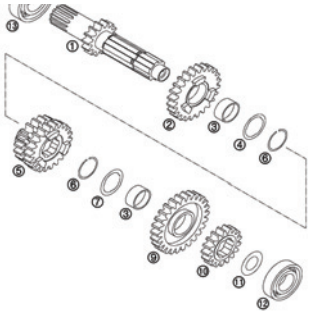		400-450-525CC	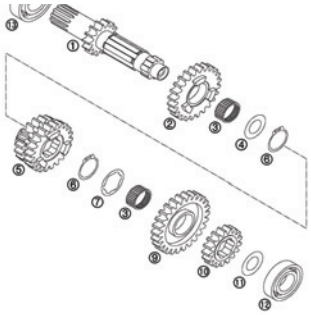		250CC	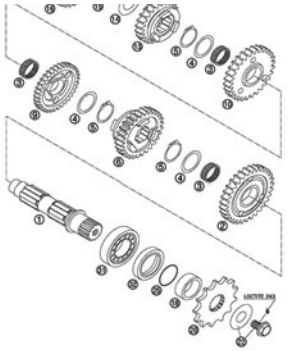	
TAV. 21	- TRASMISSIONE SECONDARIA - TRANSMISSION II° - MAIN SHAFT - TRANSMISSION SECONDAIRE	- GETRIEBE II° - ANTRIEBSWELLE - TRANSMISSION II°	TAV. 22	- COMANDO CAMBIO - SHIFTING MECHANISM - BOITE A VITESSE	- SCHALTUNG - MANDO CAMBIO	TAV. 23	- ATTREZZATURE - PARTICOLARI NON FIGURATI - SPECIAL TOOLS - SUPPLEMENTARY OARTS LIST - OUTILS - PARTICULIERS PAS MENTIONNES	- SPEZIALWERKZEUGE - NICHT VERZECHNETE TEILE - APAREJOS - PARTICULARES NO FIGURADOS
400-450-525CC	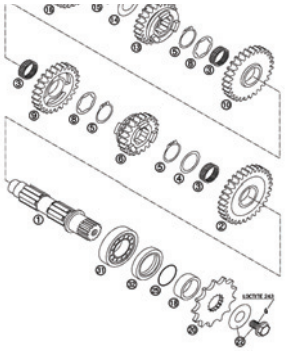		250-400-450-525CC	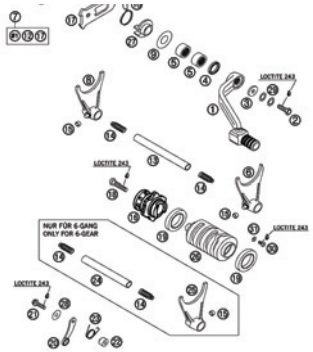			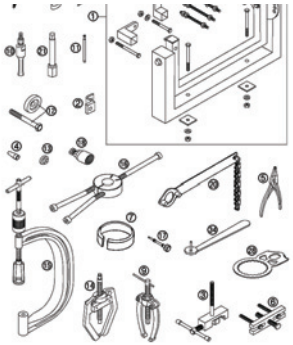	

Pos Loc Pos Ps Pos	Numero Number Numéro Nùmero Nummer	Nota Note Note Nota Anm.	Descrizione	Description	Désignation	Beschreibung	Descripciòn
1	3625210 000		Carter Motore Exc Completo	Engine Case Cpl. W.Tr.Bear	Carter Moteur Exc Complet	Motorgeh. Kpl.M.Getr.Lag.	Carter Motor Exc Completo
1	3625435 000	2006	Carter Motore Exc Completo	Engine Case Cpl. W.Tr.Bear	Carter Moteur Exc Complet	Motorgeh. Kpl.M.Getr.Lag.	Carter Motor Exc Completo
2	3625099 000		Grano Di Riferimento 17 X 14 X 12	Dowel 17 X 14 X 12	Grain 17x14x12	Passhülse 17 X13 X 12	Grano 17x14x12
3	3625087 000		Grano Di Riferimento 9,8 X 7 X 10	Dowel 9,8 X 7 X 10	Grain 9,8x7x10	Passhülse 9,8 X 7 X 10	Grano 9,8x7x10
4	3625235 000		Passatubo Sfiati Carburatore	Hanger For Vent Hose	Passe-Tube Carburateur	Bügel Für Entlüftungss-chlauch	Pasa-Tubo Carburador
5	3625004 000		Bullone M6 X 15	Hh Collar Screw M 6x15	Boulon M6x15	Sk.Bundschraube M 6x15 Sw=8	Tornillo M6x5
6	3625176 000		Tappo Olio M12 X 1,5	Oildrain Plug W.Mag M 12 X 1,5	Bouchon Huile M12x1,5	Ölablasschrb.M.Magnet M 12x1,5	Tapa Aceite M12x1,5
7	3625187 000		Guarnizione Tappo Olio Motore	Cu-Seal Ring Din 7603 - 12 X 18 X 1,5	Joint Bouchon Huile Moteur	Cu- Dichtring 12x18x1,5	Junta Tapa Aceite Motor
9	3625062 000		Tappo M12 X 1,5	Plug - M12 X 1,5	Bouchon M12x1,5	Verschl.Schr. M12x1,5	Tapo M12x1,5
10	3625221 000		Grano Di Riferimento 17 X 19 X 12	Dowel 17 X 19 X 12	Grain 17x19x12	Passbüchse 17 X 19 X 12	Grano 17x19x12
11	3625189 000		Molla Di Pressione 25mm 1mm	Pressure Spring L=25mm D=1mm	Ressort Pression 25mm 1mm	Druckfeder L=25mm D=1mm	Muelle Pression 25mm 1mm
12	3625190 000		Valvola Con Pistoncino 10mm	Valve Piston D=10mm	Valve A/Piston 10mm	Ventilkolben D=10mm	Valvula Con Piston 10mm
13	3625436 000	2006	Getto 60 M6x0,75	Jet 60 M6x0.75	Gicleur 60 M6x0,75	Düse 60 M6x0,75	Surtidor 60 M6x0,75
17	3625252 000		Tubo Sfiato Motore	Engine Breather Tube	Tube Moteur	Motorentlüftungsschlauch	Tubo Motor
18	3625219 000		Flangia Di Giunzione Tubo Sfiato Motore	Bleeder Flange M12x1,5	Joint Tube Moteur	Entlüft.Stutzen M12x1,5 Sw=13	Junta Tubo Motor
19	3625177 000		Vite Di Centraggio M8 X 23 (400-450-525cc)	Locating Screw M8 L=23 (400-450-525cc)	Vis M8x23 (400-450-525cc)	Fixierschraube M8 L=23 (400-450-525cc)	Tornillo M8x23 (400-450-525cc)
19	3625392 000		Vite Di Centraggio M8 X 34 (250cc)	Locating Screw M8 L=34 (250cc)	Vis M8x34 (250cc)	Fixierschraube M8 L=34 (250cc)	Tornillo M8x34 (250cc)
20	3625178 000		Guarnizione Vite Di Centrag-gio	Cu-Seal Ring 8 X 14 X 3	Joint Vis	Cu-Dichtring 8 X 14 X 3	Junta Tornillo
21	3625019 000		Rullino 2,5 X 9,8	Needle Roller 2,5 X 9,8	Molette 2,5x9,8	Nadelrolle 2,5x9,8	Rodillo 2,5x9,8
22	3625218 000		Oblo' Livello Olio Motore	Oil Level Glass G 1777 Y	Oblo' Niveau Huile Moteur	Ölschauglas G 1777 Y	Oblo Nivel Aceite Motor
23	2909601 000		Tappo Alimentazione Olio Cr / Exc	Oil Filler Plug	Bouchon Alimentation Huile Cr/Exc	Öleinfüllschraube M 24x3	Tapo Aceite Cr/Exc
24	3625054 000		Anello Or 19 X 3	O-Ring 19 X 3	Or 19x3	O-Ring 19 X 3	Or 19x3
26	3625021 000		Rullino 4,0 X 9,8	Needle Roller 4,0 X 9,8	Molette 4,0x9,8	Nadelrolle 4x9,8	Rodillo 4,0x9,8
29	3625015 000		Guarnizione	Washer	Joint	Unterlegscheibe Din 125 A 5,3	Junta
30	3625076 000		Vite M5x8	Screw M5 X 8	Vis M5x8	Linsenschraube M5x8	Tornillo M5x8
31	3625007 000		Bullone M6 X 8	Screw M6 X 8	Boulon M6x8	Sk.Bundschraube M6x8 Sw=8	Tornillo M6x8

CARTER MOTORE
ENGINE CASE
CARTER
MOTORGEHÄUSE
CARTER

250-400-450-525CC / 2005-2006

VERS.2007-'08-'09 ► PAG. 6
Pos. 23,40,42,43,45,46,47,48

TAV.1

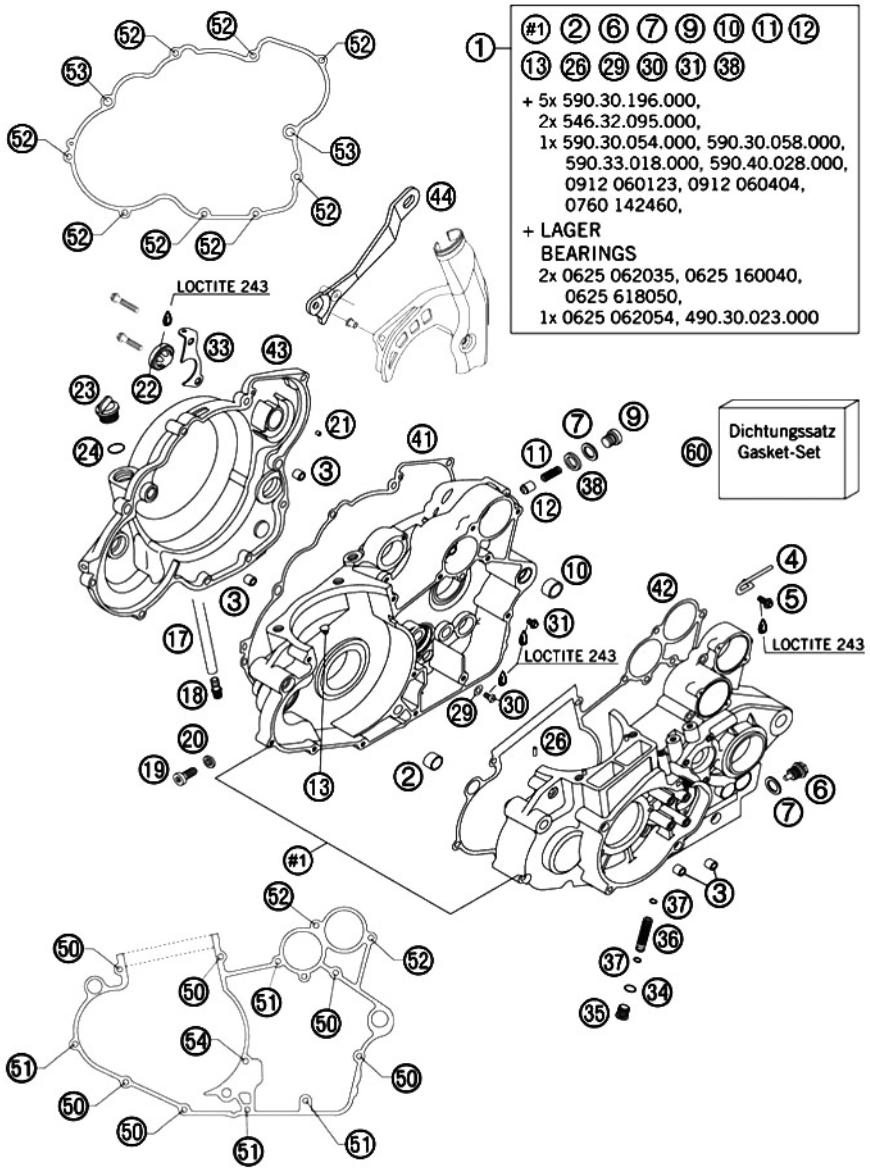

Pos Loc Pos Ps Pos	Numero Number Numéro Nùmero Nummer	Nota Note Note Nota Anm.	Descrizione	Description	Désignation	Beschreibung	Descripciòn
33	3625212 000		Piastrina	Ret. Bracket F. Brake Lever Hub	Plaquette	Haltebl. Für Bremshebelfeder	Placa
34	3625052 000		Anello Or 12 X 2	O-Ring 12 X 2	Or 12x2	O-Ring 12 X 2	Or 12x2
35	3625354 000		Tappo M16 X 1,5	Plug, M16 X 1,5	Bouchon M16x1,5	Verschl.Schr. M16x1,5	Tapa M16x1,5
36	3625355 000		Filtro Olio 11,8mm X 44,5mm	Oil Screen 11,8 X 44,5mm	Filtre Huile 11,8mmx44,5mm	Ölsieb 11,8x44,5mm	Filtro Aceite 11,8mmx44,5mm
37	3625051 000		Anello Or 9 X 1,5	O-Ring 9 X 1,5	Or 9x1,5	O-Ring 9 X 1,5	Or 9x1,5
38	3625036 000		Anello Di Tenuta 12 X 18 X 3	Seal Ring 12 X 18 X 3	Bague 12x18x3	Cu-Dichtring 12x18x3	Anillo 12x18x3
41	3625222 000		Guarnizione Per Coperchio Frizione	Gasket For Clutch Cover	Joint Couvercle Embrayage	Kupplungsdeckeldichtubg	Junta Tapa Embrague
42	3625228 000		Guarnizione Carter Motore	Gasket, Engine Case	Joint Protection Moteur	Motorgehäusedichtung Ns92-24	Junta Carter Motor
43	3625211 000		Coperchio Friz. Motore Exc Beta Racing	Clutch Cover, Beta Racing	Couvercle Embrayage Moteur Exc Beta Rac.	Kupplungsdeckel	Tapa Embrague Motor Exc Beta Racing
44	3625230 000		Staffa Di Fissaggio Pignone Catena	Chain Dampersheet	Etrier Fixage Pignon De Chiane	Kettendämpfungsblech	Abrazadera Fijacion Pignon Cadena
50	3625011 000		Bullone 6.45 Rs Ch 8	Bolt 6.45	Boulon 6.45 Rs Ch 8	Sk.Bundschraube M6x45 Sw=8	Tornillo 6.45 Rs Ch 8
51	1105485 000		Bullone 6.60 Rs Ch 8	Bolt 6.60	Boulon 6.60 Rs Ch 8	Sk.Bundschraube M6x60 Sw=8	Tornillo 6.60 Rs Ch 8
52	1150300 000		Bullone 6.30 Rs Ch 8	Bolt 6.30	Boulon 6.30 Rs Ch 8	Sk.Bundschraube M6x30 Sw=8	Tornillo 6.30 Rs Ch 8
53	3625009 000		Bullone 6.35 Rs Ch 8	Bolt 6.35	Boulon 6.35 Rs Ch 8	Sk.Bundschraube M6x35 Sw=8	Tornillo 6.35 Rs Ch 8
54	3625013 000		Bullone 6.75 Rs Ch 8	Bolt 6.75	Boulon 6.75 Rs Ch 8	Sk.Bundschraube M6x75 Sw=8	Tornillo 6.75 Rs Ch 8
60	3625236 000		Guarnizioni (Kit Completo)	Gasket Set Cpl	Joints (Jeu Complet)	Dichtungssatz Kpl.	Juntas (Juego Completo)

2007/2008/2009 Versione/Version 400 - 450 - 525 cc

POS.	COD.BETA	DESCRIZIONE	DESCRIPTION
23	2909602 000	Tappo alimentazione olio	Oil filter plug
40	3625471 000	Coperchio frizione esterno	External clutch cover
42	3625472 000	Guarnizione Carter Motore	Gasket, Engine Case
43	3625470 000	Coperchio friz.motore completo	Clutch cover assy , Beta
45	3625044 000	Anello paraolio 14x24x6	Shaft seal ring 14x24x6
46	3625045 000	Anello paraolio 19x30x7	Shaft seal ring 19x30x7
47	3625473 000	Vite 6x16	Screw 6x16
48	3625474 000	Guarnizione coperchio frizione	Gasket f.outer clutch

VERS.2007/2008 ►PAG. 6
Pos. 23,40,42,43,45,46,47,48

TAV.1

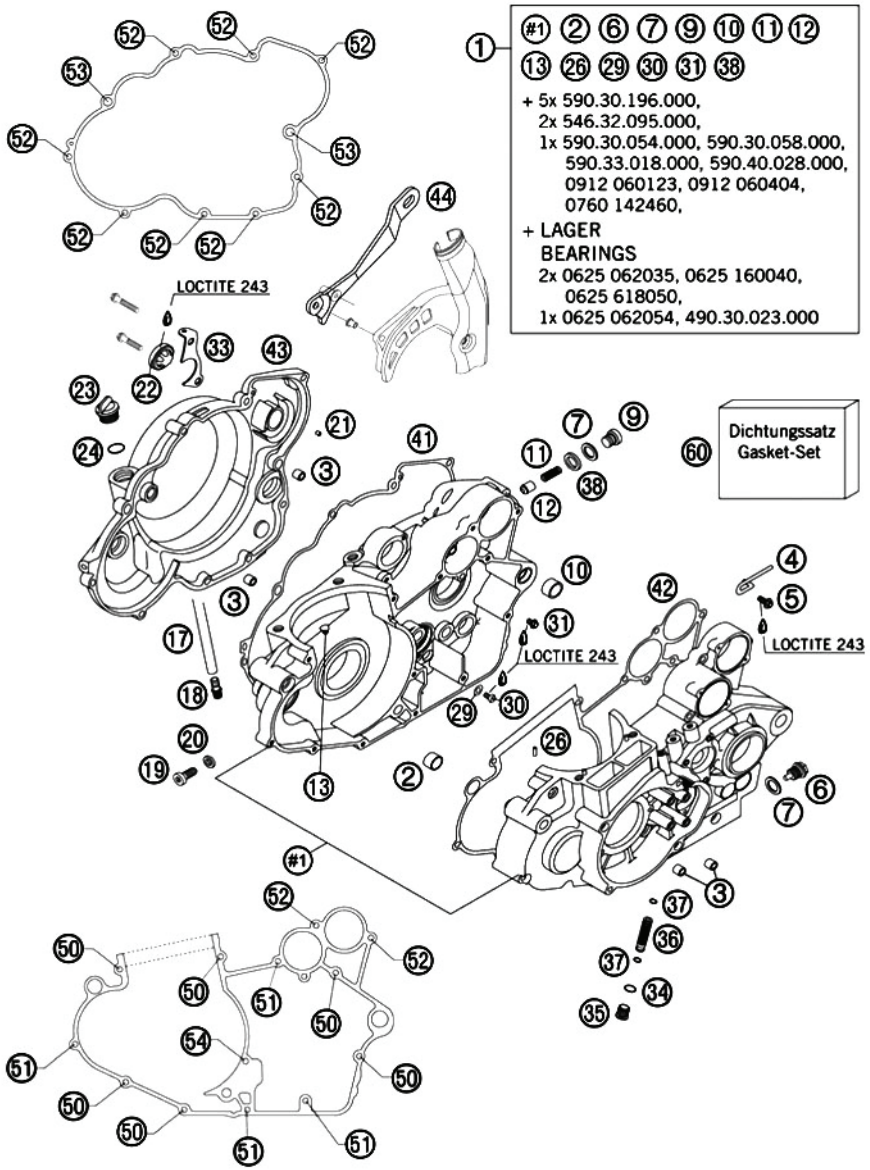

ALBERO MOTORE E PISTONE
CRANKSHAFT - PISTON
VILEBREQUIN ET PISTON
KURBELWELLE - KOLBEN
CIGUENAL Y PYSTON

250CC / 2005-2006

TAV.2

Pos Loc Pos Ps Pos	Numero Number Numéro Nùmero Nummer	Nota Note Note Nota Anm.	Descrizione	Description	Désignation	Beschreibung	Descripciòn
1	3625386 000		Albero Motore Completo Exc 250cc	Crankshaft Cpl. 250cc	Vilebrequin Complet Exc 250cc	Kurbelwelle Kpl. 250cc	Ciguenal Completo Exc 250cc
2	3625216 000		Biella Completa Exc 250/ 450/525cc	Con.Rod Rep.Set 250/450/ 525cc	Bielle Complete Exc 250/ 450/525cc	Pleuel.Rep.Satz 250cc	Biela Completa Exc 250/ 450/525 Exc
4	3625091 000		Cuscinetto Albero Motore Exc	Cyl.Roller Bear	Roulement Arbre Moteur Exc	Zylinderr.Lager Nj206	Cojinete Arbre Motor Exc
5	3625231 000		Ingranaggio Albero Motore Exc	Drive Gear 32-T F.Bal-anc.Shaft	Engranage Vilebrequin Exc	Antriebsrad 32-Z Für Agw	Engranaje Ciguenal Exc
6	3625133 000		Rondella Rasamento 30,5x45x0,10	Thrust Washer 30,5x45x0,10	Rondelle 30,5x45x0,10	Passscheibe 30,5x45x0,10	Arandela 30,5x45x0,10
6	3625134 000		Rondella Rasamento 30,7x47x0,15	Thrust Washer 30,7x47x0,15	Rondelle 30,7x47x0,15	Passscheibe 30,7x47x0,15	Arandela 30,7x47x0,15
6	3625135 000		Rondella Rasamento 30,5x45x0,30	Thrust Washer 30,5x45x0,30	Rondelle 30,5x45x0,30	Passscheibe 30,5x45x0,30	Arandela 30,5x45x0,30
7	3625061 000		Chiavetta 3x5x13	Woodruff Key 3x5x13	Clavette 3x5x13	Scheibenfeder 3x5x13	Llave 3x5x13
8	3625072 000		Vite M6x16	Screw M6x16	Vis M6x16	Zyl.Schraube M6x16 8.8	Tornillo M6x16
9	3625046 000		Anello Paraolio 30x47x7	Shaft Seal Ring 30x47x7 Bsl Viton	Joint Spy 30x47x7	Wellendichtr.30x47x7	Junta Aceite 30x47x7
13	3625257 000		Ingranaggio Primario 33 T	Primary Gear 33 T	Engranage Primaire 33t	Primärrad 33-Z	Engranaje Primario 33t
14	3625066 000		Vite M6x10	Screw M6x10	Vis M6x10	Isk.Schraube M6x10.9	Tornillo M6x10
15	3625223 000		Dado Speciale M20x1,5 (Sinistro)	Hh Nur M20x1,5 Ws=27 Left	Ecrou Spec. M20x1,5 (Gauche)	Sk-Mutter M20x1,5	Dado Especial M20x1,5 (Izquierdo)
16	3625002 000		Chiave Speciale 5x6,25	Woodruff Key 5x6,5 Harded	Cle Speciale 5x6,25	Scheibenfeder 5x6,5 Gehärtet	Llave Especial 5x6,25
17	3625044 000		Anello Paraolio 14x24x6	Shaft Seal Ring 14x24x6 B	Joint Spy 14x24x6	Wellendichtring 14x24x6 B	Junta Aceite 14x24x6
18	3625033 000		Anello 25 X 1,2	Circlip 25x1,2	Bague 25x1,2	Sicherungsring 25x1,2	Anillo 25x1,2
20	1325010 000		Dado Spec. Volano Moric Cr 65/85	Nut, Magneto Special	Ecrou Spec. Volant Moric Cr65/86	Bundmutter M12x1 Rechts	Tuerca Espec. Volante Mag-netico Moric Cr65/85
21	3625017 000		Molla A Tazza	Spring Washer	Ressort	Federscheibe B12	Muelle
33	3625225 000		Spinotto Pistone Motore 250cc	Piston Pin Bolt 20x15,8/ 12x50	Axe Piston Moteur 250cc	Kolbenbolzen 20x15,8/ 12x50	Pasador Piston Motor 250cc
34	3625233 000		Anello Ferma Spinotto 20x1,5	Circlip 20x1,5	Bague Axe 20x1,5	Drahtsprengrig C20x1,5	Anillo 20x1,5
40	3625425 000		Pistone Completo I Motore 250cc	Piston I Cpl 250cc	Piston Complet I Moteur 250cc	Kolben I Kpl. 250cc	Piston Completo I Motor 250cc
40	3625426 000		Pistone Completo Ii Motore 250cc	Piston Ii Cpl 250cc	Piston Complet Ii Moteur 250cc	Kolben Ii Kpl. 250cc	Piston Completo Ii Motor 250cc
41	3625387 000		Anello Raschia Olio Pistone Motore 250cc	Oil Scraper Ring 75mm	Bague Piston Moteur 250cc	Ölabstreifring 75mm	Anillo Pistom Motor 250cc
42	3625388 000		Segmento 75/68 7x1,25 Pist. Motore 250cc	Rectangular Ring 75/68, 7x1,25	Segment 75/68 7x1,25 Pis-ton Moteur 250cc	Rechteckring 75/68,7x1,25	Segmento 75/68 7x1,25 Piston Motor 250cc

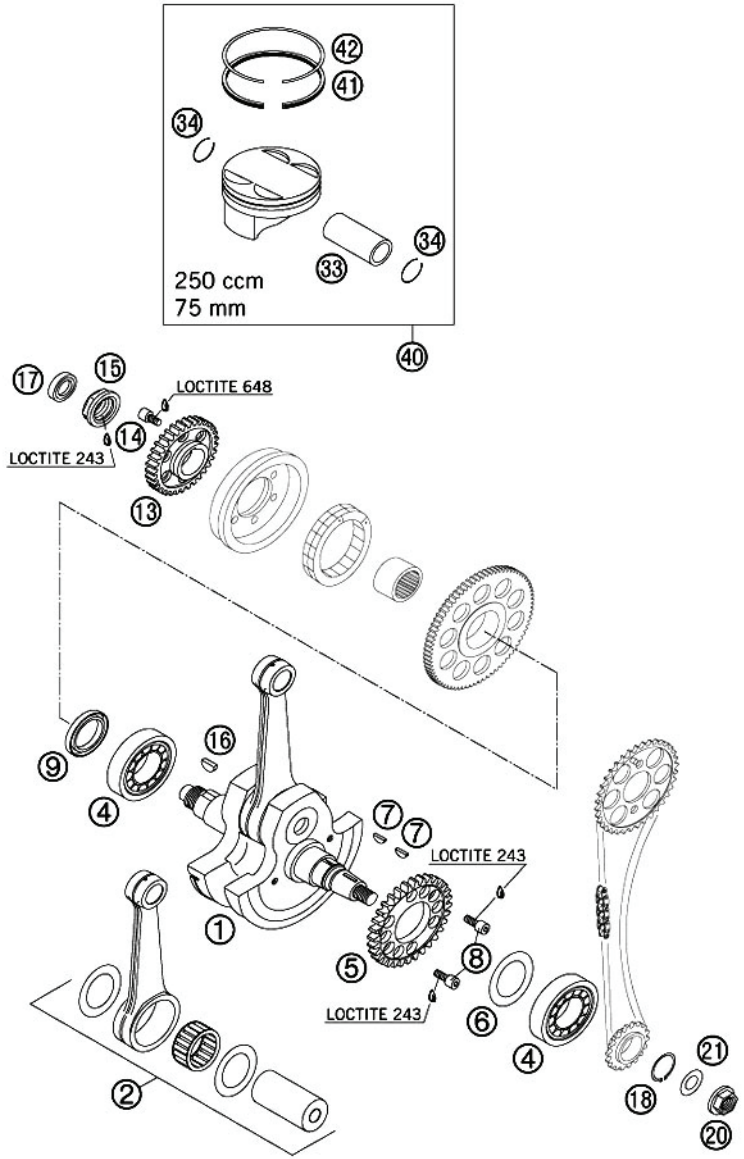

ALBERO MOTORE E PISTONE
CRANKSHAFT - PISTON
VILEBREQUIN ET PISTON
KURBELWELLE - KOLBEN
CIGUENAL Y PYSTON

400CC / 2005-2006

TAV.3

Pos Loc Pos Ps Pos	Numero Number Numéro Nùmero Nummer	Nota Note Note Nota Anm.	Descrizione	Description	Désignation	Beschreibung	Descripciòn
1	3625380 000		Albero Motore Completo Exc 400cc	Crankshaft Cpl. 400cc	Vilebrequin Complet Exc 400cc	Kurbelwelle Kpl. 400cc	Ciguenal Completo Exc 400cc
1	3625438 000	2006	Albero Motore Completo Exc 400cc	Crankshaft Cpl. 400cc	Vilebrequin Complet Exc 400cc	Kurbelwelle Kpl. 400cc	Ciguenal Completo Exc 400cc
2	3625379 000		Biella Completa Exc 400cc	Con.Rod Rep.Set 400cc	Bielle Complete Exc 400cc	Pleuel.Rep.Satz 400cc	Bilea Completa Exc 400cc
4	3625091 000		Cuscinetto Albero Motore Exc	Cyl.Roller Bear	Roulement Arbre Moteur Exc	Zylinderr.Lager Nj206	Cojinete Arbre Motor Exc
5	3625231 000		Ingranaggio Albero Motore Exc	Drive Gear 32-T F.Bal-anc.Shaft	Engranage Vilebrequin Exc	Antriebsrad 32-Z Für Agw	Engranaje Ciguenal Exc
6	3625133 000		Rondella Rasamento 30,5x45x0,10	Thrust Washer 30,5x45x0,10	Rondelle 30,5x45x0,10	Passscheibe 30,5x45x0,10	Arandela 30,5x45x0,10
6	3625134 000		Rondella Rasamento 30,7x47x0,15	Thrust Washer 30,7x47x0,15	Rondelle 30,7x47x0,15	Passscheibe 30,7x47x0,15	Arandela 30,7x47x0,15
6	3625135 000		Rondella Rasamento 30,5x45x0,30	Thrust Washer 30,5x45x0,30	Rondelle 30,5x45x0,30	Passscheibe 30,5x45x0,30	Arandela 30,5x45x0,30
7	3625061 000		Chiavetta 3x5x13	Woodruff Key 3x5x13	Clavette 3x5x13	Scheibenfeder 3x5x13	Llave 3x5x13
8	3625072 000		Vite M6x16	Screw M6x16	Vis M6x16	Zyl.Schraube M6x16 8.8	Tornillo M6x16
9	3625046 000		Anello Paraolio 30x47x7	Shaft Seal Ring 30x47x7 Bsl Viton	Joint Spy 30x47x7	Wellendichtr.30x47x7	Junta Aceite 30x47x7
13	3625257 000		Ingranaggio Primario 33 T	Primary Gear 33 T	Engranage Primaire 33t	Primärrad 33-Z	Engranaje Primario 33t
14	3625066 000		Vite M6x10	Screw M6x10	Vis M6x10	Isk.Schraube M6x10.9	Tornillo M6x10
15	3625223 000		Dado Speciale M20x1,5 (Sinistro)	Hh Nur M20x1,5 Ws=27 Left	Ecrou Spec. M20x1,5 (Gauche)	Sk-Mutter M20x1,5	Dado Especial M20x1,5 (Izquierdo)
16	3625002 000		Chiave Speciale 5x6,25	Woodruff Key 5x6,5 Harded	Cle Speciale 5x6,25	Scheibenfeder 5x6,5 Gehärtet	Llave Especial 5x6,25
17	3625044 000		Anello Paraolio 14x24x6	Shaft Seal Ring 14x24x6 B	Joint Spy 14x24x6	Wellendichtring 14x24x6 B	Junta Aceite 14x24x6
18	3625033 000		Anello 25 X 1,2	Circlip 25x1,2	Bague 25x1,2	Sicherungsring 25x1,2	Anillo 25x1,2
20	1325010 000		Dado Spec. Volano Moric Cr 65/85	Nut, Magneto Special	Ecrou Spec. Volant Moric Cr65/86	Bundmutter M12x1 Rechts	Tuerca Espec. Volante Mag-netico Moric Cr65/85
21	3625017 000		Molla A Tazza	Spring Washer	Ressort	Federscheibe B12	Muelle
33	3625225 000		Spinotto Pistone Motore 250cc	Piston Pin Bolt 20x15,8/ 12x50	Axe Piston Moteur 250cc	Kolbenbolzen 20x15,8/ 12x50	Pasador Piston Motor 250cc
34	3625233 000		Anello Ferma Spinotto 20x1,5	Circlip 20x1,5	Bague Axe 20x1,5	Drahtsprengrig C20x1,5	Anillo 20x1,5
40	3625423 000		Pistone Completo I Motore 400cc	Piston I Cpl 400cc	Piston Complet I Moteur 400cc	Kolben I Kpl. 89mm 400cc	Piston Completo I Motor 400cc
40	3625424 000		Pistone Completo Ii Motore 400cc	Piston Ii Cpl 400cc	Piston Complet Ii Moteur 400cc	Kolben Ii Kpl. 89mm 400cc	Pistom Motor Completo Ii Motor 400cc
41	3625381 000		Anello Raschia Olio Pist. Mot.400/450cc	Oil Scraper Ring 89/81,5x3	Bague Piston Moteur 400/ 450cc	Ölabstreifring 89/81,5x3	Anillo Piston Motor 400/ 452cc
42	3625172 000		Segmento 89mm Pist. Motore 400cc	Rectangular Ring 89mm	Segment 89mm Piston Moteur 400cc	Rechteckring 89mm	Segmento 89mm Piston Motor 400cc

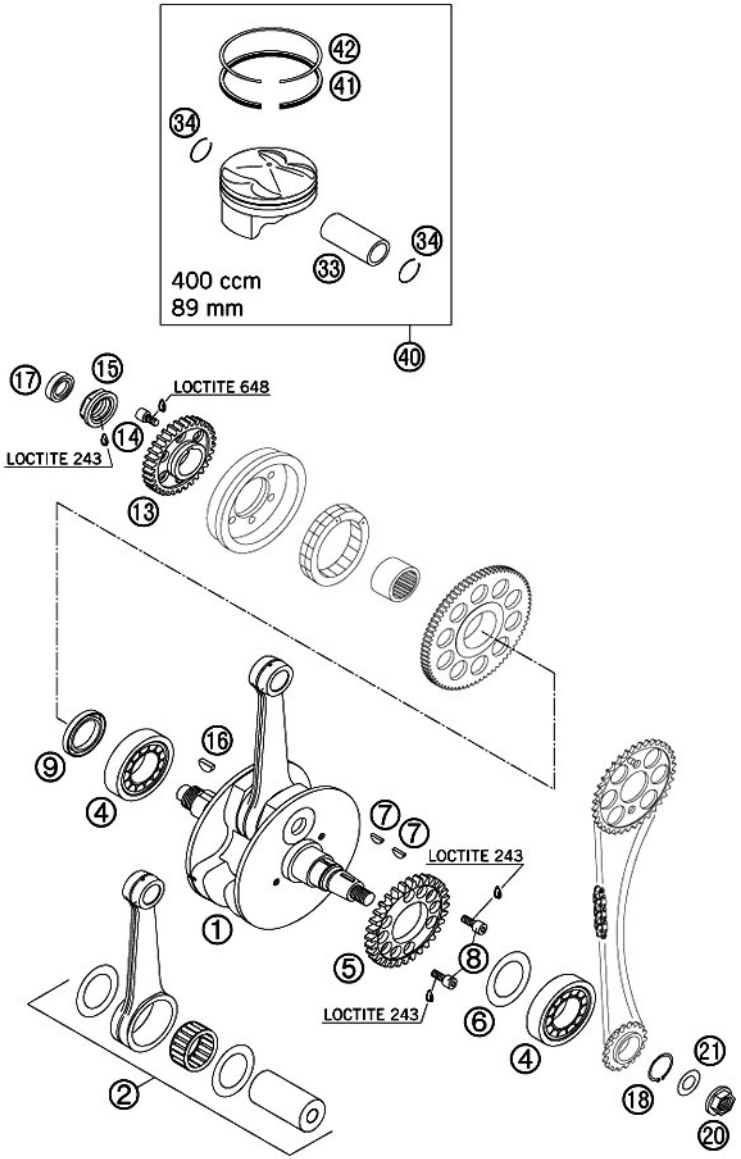

VERS.2007-'08-'09
►PAG. 10, Pos. 1

TAV.4

Pos Loc Pos Ps Pos	Numero Number Numéro Nùmero Nummer	Nota Note Note Nota Anm.	Descrizione	Description	Désignation	Beschreibung	Descripciòn
1	3625217 000		Albero Motore Completo Exc 450/525cc	Crankshaft Cpl. 450/525cc	Vilebrequin Compl. Exc 450/525cc	Kurbelwelle Kpl. 450/525cc	Ciguenal Completo Exc 450/525 Exc
1	3625439 000	2006	Albero Motore Completo Exc 450/525cc	Crankshaft Cpl. 450/525cc	Vilebrequin Compl. Exc 450/525cc	Kurbelwelle Kpl. 450/525cc	Ciguenal Completo Exc 450/525 Exc
2	3625216 000		Biella Completa Exc 250/450/525cc	Con.Rod Rep.Set 250/450/525cc	Bielle Complete Exc 250/450/525cc	Pleuel.Rep.Satz 450/525cc	Biela Completa Exc 250/450/525 Exc
4	3625091 000		Cuscinetto Albero Motore Exc	Cyl.Roller Bear	Roulement Arbre Moteur Exc	Zylinderr.Lager Nj206	Cojinete Arbre Motor Exc
5	3625231 000		Ingranaggio Albero Motore Exc	Drive Gear 32-T F.Balanc.Shaft	Engranage Vilebrequin Exc	Antriebsrad 32-Z Für Agw	Engranaje Ciguenal Exc
6	3625133 000		Rondella Rasamento 30,5x45x0,10	Thrust Washer 30,5x45x0,10	Rondelle 30,5x45x0,10	Passscheibe 30,5x45x0,10	Arandela 30,5x45x0,10
6	3625134 000		Rondella Rasamento 30,7x47x0,15	Thrust Washer 30,7x47x0,15	Rondelle 30,7x47x0,15	Passscheibe 30,7x47x0,15	Arandela 30,7x47x0,15
6	3625135 000		Rondella Rasamento 30,5x45x0,30	Thrust Washer 30,5x45x0,30	Rondelle 30,5x45x0,30	Passscheibe 30,5x45x0,30	Arandela 30,5x45x0,30
7	3625061 000		Chiavetta 3x5x13	Woodruff Key 3x5x13	Clavette 3x5x13	Scheibenfeder 3x5x13	Llave 3x5x13
8	3625072 000		Vite M6x16	Screw M6x16	Vis M6x16	Zyl.Schraube M6x16 8.8	Tornillo M6x16
9	3625046 000		Anello Paraolio 30x47x7	Shaft Seal Ring 30x47x7 Bsl Viton	Joint Spy 30x47x7	Wellendichtr.30x47x7	Junta Aceite 30x47x7
13	3625257 000		Ingranaggio Primario 33 T	Primary Gear 33 T	Engranage Primaire 33t	Primärrad 33-Z	Engranaje Primario 33t
14	3625066 000		Vite M6x10	Screw M6x10	Vis M6x10	Isk.Schraube M6x10.9	Tornillo M6x10
15	3625223 000		Dado Speciale M20x1,5 (Sinistro)	Hh Nur M20x1,5 Ws=27 Left	Ecrou Spec. M20x1,5 (Gauche)	Sk-Mutter M20x1,5	Dado Especial M20x1,5 (Izquierdo)
16	3625002 000		Chiave Speciale 5x6,25	Woodruff Key 5x6,5 Harded	Cle Speciale 5x6,25	Scheibenfeder 5x6,5 Gehärtet	Llave Especial 5x6,25
17	3625044 000		Anello Paraolio 14x24x6	Shaft Seal Ring 14x24x6 B	Joint Spy 14x24x6	Wellendichtring 14x24x6 B	Junta Aceite 14x24x6
18	3625033 000		Anello 25 X 1,2	Circlip 25x1,2	Bague 25x1,2	Sicherungsring 25x1,2	Anillo 25x1,2
20	1325010 000		Dado Spec. Volano Moric Cr 65/85	Nut, Magneto Special	Ecrou Spec. Volant Moric Cr65/86	Bundmutter M12x1 Rechts	Tuerca Espec. Volante Magnetico Moric Cr65/85
21	3625017 000		Molla A Tazza	Spring Washer	Ressort	Federscheibe B12	Muelle
33	3625225 000		Spinotto Pistone Motore 250cc	Piston Pin Bolt 20x15,8/12x50	Axe Piston Moteur 250cc	Kolbenbolzen 20x15,8/12x50	Pasador Piston Motor 250cc
34	3625233 000		Anello Ferma Spinotto 20x1,5	Circlip 20x1,5	Bague Axe 20x1,5	Drahtsprengrig C20x1,5	Anillo 20x1,5
40	3625421 000		Pistone Completo I Motore 450cc	Piston I Cpl 450cc	Piston Complet I Moteur 450cc	Kolben I Kpl. 89mm Gr.1 450cc	Piston Completo I Motor 450cc
40	3625422 000		Pistone Completo Ii Motore 450cc	Piston Ii Cpl 450cc	Piston Complet Ii Moteur 450cc	Kolben Ii Kpl. 89mm Gr.2 450cc	Piston Completo Ii Motor 450cc
41	3625381 000		Anello Raschia Olio Pist. Mot.400/450cc	Oil Scraper Ring 89/81,5x3	Bague Piston Moteur 400/450cc	Ölabstreifring 89/81,5x3	Anillo Piston Motor 400/452cc
42	3625172 000		Segmento 89mm Pist. Motore 400cc	Rectangular Ring 89mm	Segment 89mm Piston Moteur 400cc	Rechteckring 89mm	Segmento 89mm Piston Motor 400cc

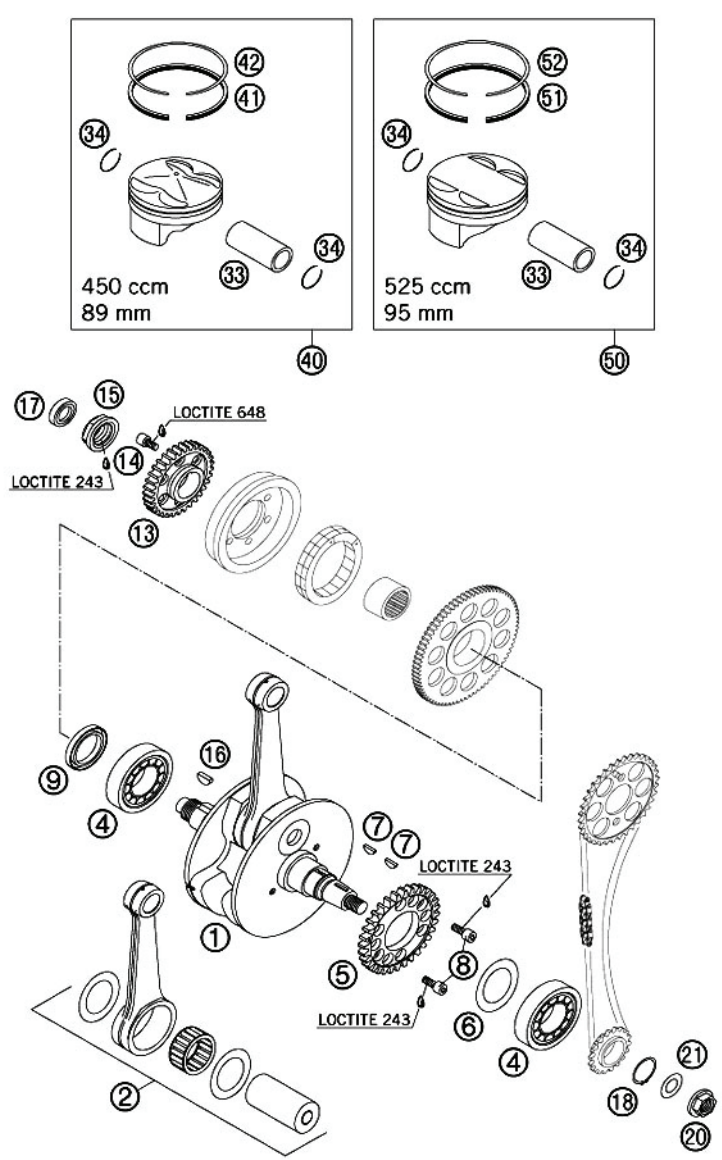

Pos Loc Pos Ps Pos	Numero Number Numéro Nùmero Nummer	Nota Note Note Nota Anm.	Descrizione	Description	Désignation	Beschreibung	Descripciòn
50	3625417 000		Pistone Completo I Motore 525cc	Piston I Cpl 525cc	Piston Complet I Moteur 525cc	Kolben I Kpl. 95mm Gr.1 525cc	Piston Completo I Motor 525cc
50	3625418 000		Pistone Completo Ii Motore 525cc	Piston Ii Cpl 525cc	Piston Complet Ii Moteur 525cc	Kolben Ii Kpl. 95mm Gr.2 525cc	Piston Completo Ii Motor 525cc
51	3625179 000		Anello Raschia Olio Pist. Motore 525cc	Oil Scraper Ring 95mm	Bague Piston Moteur 525cc	Ölabstreifring 95	Anillo Piston Motor 525cc
52	3625224 000		Segmento 95/87,2x1,25 Pist. Motore 525cc	Rectangular Ring 95/ 87,2x1,25	Segment 95/87,2x1,25 Piston Moteur 525cc	Rechteckring 95/87,2x1,25	Segmento 95/87,2x1,25 Piston Motor 525cc

2007/2008/2009 Versione/Version 450 - 525 cc

POS.	COD.BETA	DESCRIZIONE	DESCRIPTION
1	3625489 000	Albero motore completo	Crankshaft cpl

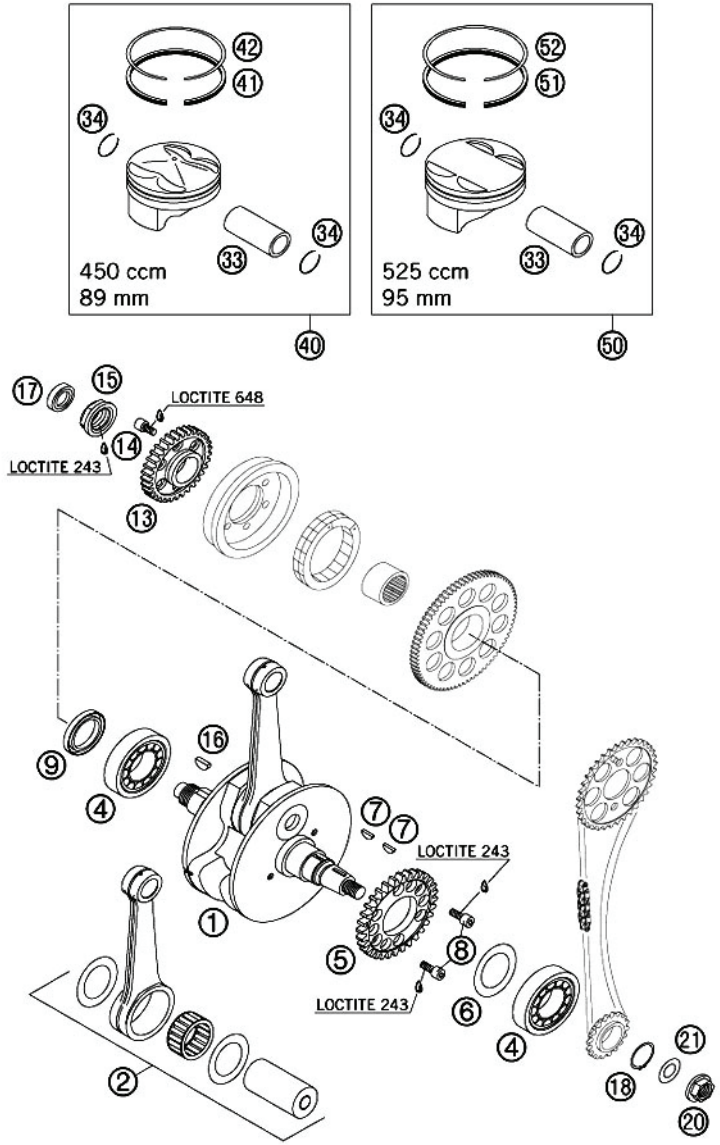

ALBERO BILANCIAMENTO
BALANCER SHAFT
VILEBREQUIN BALANCER
AUSGLEICHSWELLE
CIGUENAL BALANCA

250-400-450-525CC / 2005-2006

TAV.5

Pos Loc Pos Ps Pos	Numero Number Numéro Nùmero Nummer	Nota Note Note Nota Anm.	Descrizione	Description	Désignation	Beschreibung	Descripciòn
1	3625390 000		Albero Bilanciam. Con Ingr.250cc	Balanver Shaft W/Gear-wheel 250cc	Arbre Avec Engranage 250cc	Agw Kpl.Mit Zahnrad 250cc	Ciguenal Balance Con Engranaje 250cc
2	3625232 000		Albero Bilanciamento Completo 400-450-525cc	Balanver Shaft Cpl. 400/450/525cc	Arbre Complet 400/450/525cc	Ausgleichswelle Kpl. 400/450/525cc	Ciguenal Completo 400/450/525cc
4	3625041 000		Cuscinetto Albero Bilanciamento Exc	Cyl.Roller Bear	Roulement Exc	Rillenkugellager Tm 16004 C3	Cojinete Arbre Exc
6	3625044 000		Anello Paraolio 14x24x6	Shaft Seal Ring 14x24x6 B	Joint Spy 14x24x6	Wellendichtring 14x24x6 B	Junta Aceite 14x24x6

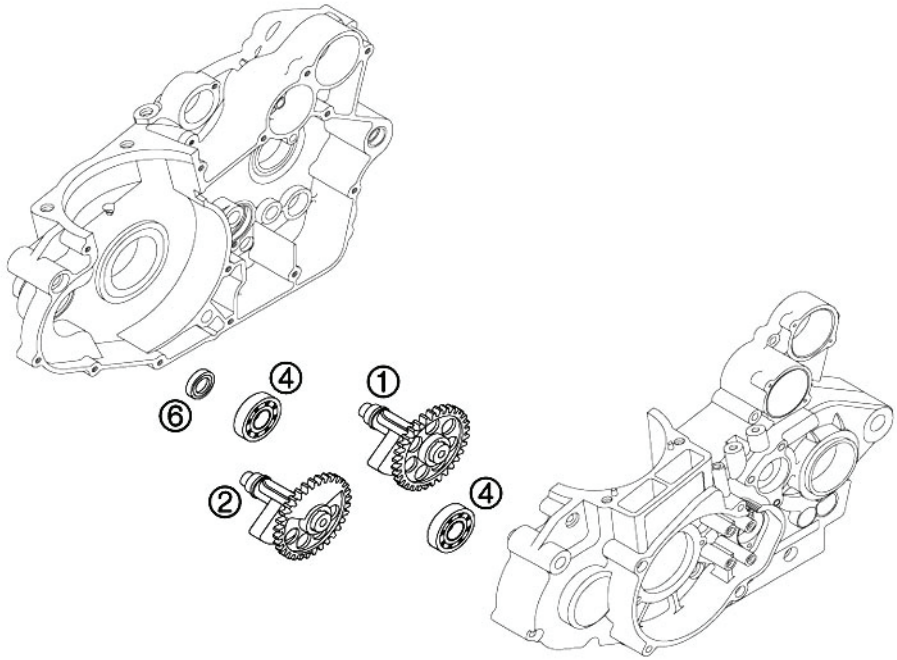

CILINDRO
CYLINDER
CYLINDRE
ZYLINDER
CILINDRO

250-400-450-525CC / 2005-2006

TAV.6

Pos Loc Pos Ps Pos	Numero Number Numéro Nùmero Nummer	Nota Note Note Nota Anm.	Descrizione	Description	Désignation	Beschreibung	Descripciòn
1	3625215 000		Cilindro 95mm Motore 525cc	Cylinder 95mm	Cylindre 95mm Moteur 525cc	Zylinder 95mm 525cc	Cilindro 95mm Motor 525cc
1	3625378 000		Cilindro 89mm Motore 400/ 450cc	Cylinder 400/450mm	Cylindre 89mm Moteur 400/450cc	Zylinder 89mm 400/450cc	Cilindro 89mm Motor 400/ 450cc
1	3625385 000		Cilindro 75mm Motore 250cc	Cylinder 75mm	Cylindre 75mm Moteur 250cc	Zylinder 75mm 250cc	Cilindro 75mm Motor 250cc
2	3625226 000		Guarnizione Base Cil.0,5mm 250/400/525cc	Cylinder Base Gasket 0,5mm 250/400/525cc	Joint Base Cylindre 0,5mm 250/400/525cc	Zylinderfussdichtung 0,5mm 250/400/525cc	Junta Base Cilindro 0,5mm 250/400/525 Exc
2	3625372 000		Guarnizione Base Cil.0,8mm 450cc	Cylinder Base Gasket 0,8mm 450cc	Joint Base Cylindre 0,8mm 450cc	Zylinderfussdichtung 0,8mm 450cc	Junta Base Cilindro 0,8mm 450cc
3	3625220 000		Grano Di Riferimento 6 X 8 X 11,5	Dowel 6 X 8 X 11,5	Grain 6x8x11,5	Passhülse 6x8x11,5	Grano 6x8x11,5
4	3625010 000		Bullone 6.40 Rs Ch 8	Collar Screw M6x40 Ws 8	Boulon 6.40 Rs Ch 8	Sk.Bundschraube M6x40 Sw=8	Tornillo 6.40 Rs Ch 8
5	3625011 000		Bullone 6.45 Rs Ch 8	Bolt 6.45	Boulon 6.45 Rs Ch 8	Sk.Bundschraube M6x45 Sw=8	Tornillo 6.45 Rs Ch 8
7	3625021 000		Rullino 4,0 X 9,8	Needle Roller 4,0 X 9,8	Molette 4,0x9,8	Nadelrolle 4x9,8	Rodillo 4,0x9,8
8	3625034 000		Guarnizione 6x10x1	Cu-Seal Ring 6x10x1	Joint 6x10c1	Cu-Dichtring 6x10x1	Junta 6x10x1
9	3625008 000		Bullone 6.10 Rs Ch 8	Collar Screw M6x10 Ws 8	Boulon 6.10 Rs Ch 8	Sk.Bundschraube M6x10 Sw=8	Tornillo 6.10 Rs Ch 8

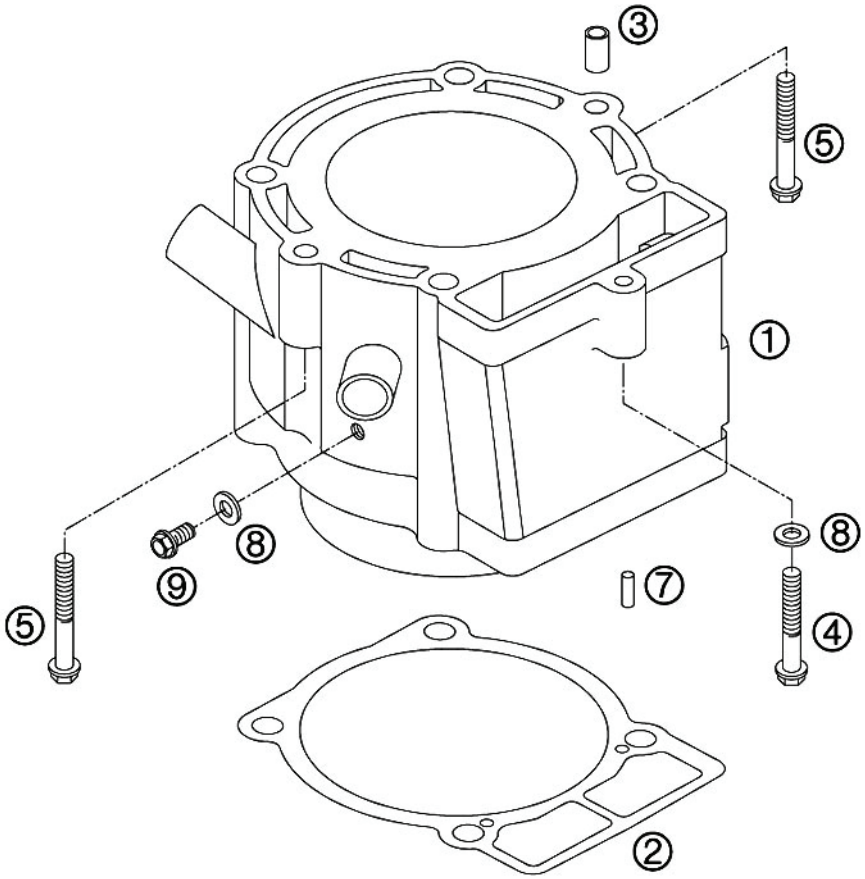

VERS.2007-'08-'09
►PAG. 14, Pos. 1,43

TAV.7

Pos Loc Pos Ps Pos	Numero Number Numéro Nùmero Nummer	Nota Note Note Nota Anm.	Descrizione	Description	Désignation	Beschreibung	Descripciòn
1	3625326 000		Testa (Completa) Motore 400/450/525cc	Cylinder Head Cpl. 400/450/525cc	Tete (Complete) Moteur 400/450/525cc	Zylinderk.Kpl 400/450/525cc	Culata(Completa) Motor 400/450/525cc
1	3625408 000		Testa (Completa) Motore 250cc	Cylinder Head Cpl. 250cc	Tete (Complete) Moteur 250cc	Zylinderk.Kpl 250cc	Culata (Completa) Motor 250cc
2	3625227 000		Guarnizione Cilindro/Testa 95,3mm 525cc	Cylinder Head Gasket 95,3mm 525cc	Joint Cylindre/Tete 95,3mm 525cc	Zylinderkopfdichhtung 95,3mm 525cc	Junta Cilindro/Culata 95,3mm 525cc
2	3625382 000		Guarnizione Cil/Testa 89,3mm 400/450cc	Cylinder Head Gasket 89,3mm 400/450cc	Joint Cylindre/Tete 89,3mm 400/450cc	Zylinderkopfdichhtung 89,3mm 400-450cc	Junta Cilindro/Culata 400/450cc
2	3625389 000		Guarnizione Cil./Testa 75mm 250cc	Cylinder Head Gasket 75mm 250cc	Joint Cylindre/Tete 75mm 250cc	Zylinderkopfdichhtung 75mm 250cc	Junta Cilindro/Culata 75mm 250cc
3	3625182 000		Coperchio Valvole	Valve Cover	Couvercle Valve	Ventildeckel Hinten	Tapa Valvulas
3	3625456 000	2006	Coperchio Valvole	Valve Cover	Couvercle Valve	Ventildeckel Hinten	Tapa Valvulas
4	3625183 000		Guarnizione Coperchio Posteriore Valvole	Valve Cover Gasket	Joint Couvercle Arriere Valves	Ventildeckeldichtung	Junta Tapa Trasera Valvulas
5	3625012 000		Bullone 6.55 Rs Ch 8 10.9	Collar Screw M6x55 Ws 8 (10.9)	Boulon 6.55 Rs Ch 8 10.9	Sk.Bundschraube M6x55 Sw=8 10.9	Tornillo 6.55 Rs Ch 8 10.9
6	3625011 000		Bullone 6.45 Rs Ch 8	Bolt 6.45	Boulon 6.45 Rs Ch 8	Sk.Bundschraube M6x45 Sw=8	Tornillo 6.45 Rs Ch 8
7	3625013 000		Bullone 6.75 Rs Ch 8	Bolt 6.75	Boulon 6.75 Rs Ch 8	Sk.Bundschraube M6x75 Sw=8	Tornillo 6.75 Rs Ch 8
8	1150300 000		Bullone 6.30 Rs Ch 8	Bolt 6.30	Boulon 6.30 Rs Ch 8	Sk.Bundschraube M6x30 Sw=8	Tornillo 6.30 Rs Ch 8
9	1105535 000		Bullone 6.50 Rs Ch 8	Bolt 6.50	Boulon 6.50 Rs Ch 8	Sk.Bundschraube M6x50 Sw=8	Tornillo 6.50 Rs Ch 8
10	3625327 000		Guida Valvole Aspirazione	Valve Guide Intake	Guide Valves Aspiration	Ventilführung Einlass	Guia Valvulas Aspiracion
10	3625457 000	2006	Guida Valvole Aspirazione	Valve Guide Intake	Guide Valves Aspiration	Ventilführung Einlass	Guia Valvulas Aspiracion
11	3625328 000		Guida Valvole Scarico	Valve Guide Exhaust	Guide Valves	Ventilführung Auslass	Guia Valvulas
12	2213205 000		Manicotto Carb. Mot. 250/400/450/525 Exc	Intake Boot	Douille Carb. Moteur 250/400/450/525 Exc	Gummimuffe	Manguito Carb. Motor 250/400/450/525 Exc
12	3625459 000	2006	Manicotto Carb. Mot. 250/400/450/525 Exc	Intake Boot	Douille Carb. Moteur 250/400/450/525 Exc	Gummimuffe	Manguito Carb. Motor 250/400/450/525 Exc
13	1514272 000		Fascetta Rac.Aspiraz.250/400/450/525 Exc	Clamp	Tige Rac. Asp. 250/400/450/525 Exc	Schelle D=56mm B=9mm M4x25	Brida Enlace Aspiracion 250/400/450/525 Exc
15	3625375 000		Bocchettone Di Scarico 400/450/525cc	Exhaust Flange Cpl. 400/450/525cc	Joint D'echappement 400/450/525cc	Auspufflansch Kpl. 400/450/525cc	Tubo Escape 400/450/525cc
15	3625412 000		Bocchettone Di Scarico 250cc	Exhaust Flange Cpl. 250cc	Tube D'echappement 250cc	Auspufflansch Kpl. 250cc	Tubo Escape 250cc
16	3625334 000		Guarnizione Bocchettone Scarico	Gasket Exhaust Flange	Joint Goulotte Vidange	Dichtung Auspufflansch	Junta Tubo
17	1149070 000		Bullone 6.20 Rs Ch 8	Bolt 6.20	Boulon 6.20 Rs Ch 8	Sk.Bundschraube M6x20 Sw=8	Tornillo 6.20 Rs Ch 8
18	3625034 000		Guarnizione 6x10x1	Cu-Seal Ring 6x10x1	Joint 6x10c1	Cu-Dichtring 6x10x1	Junta 6x10x1
19	1148025 000		Bullone 6.16 Rs Ch 8	Bolt 6.16	Boulon 6.16 Rs Ch 8	Sk.Bundschraube M6x16 Sw=8	Tornillo 6.16 Rs Ch 8

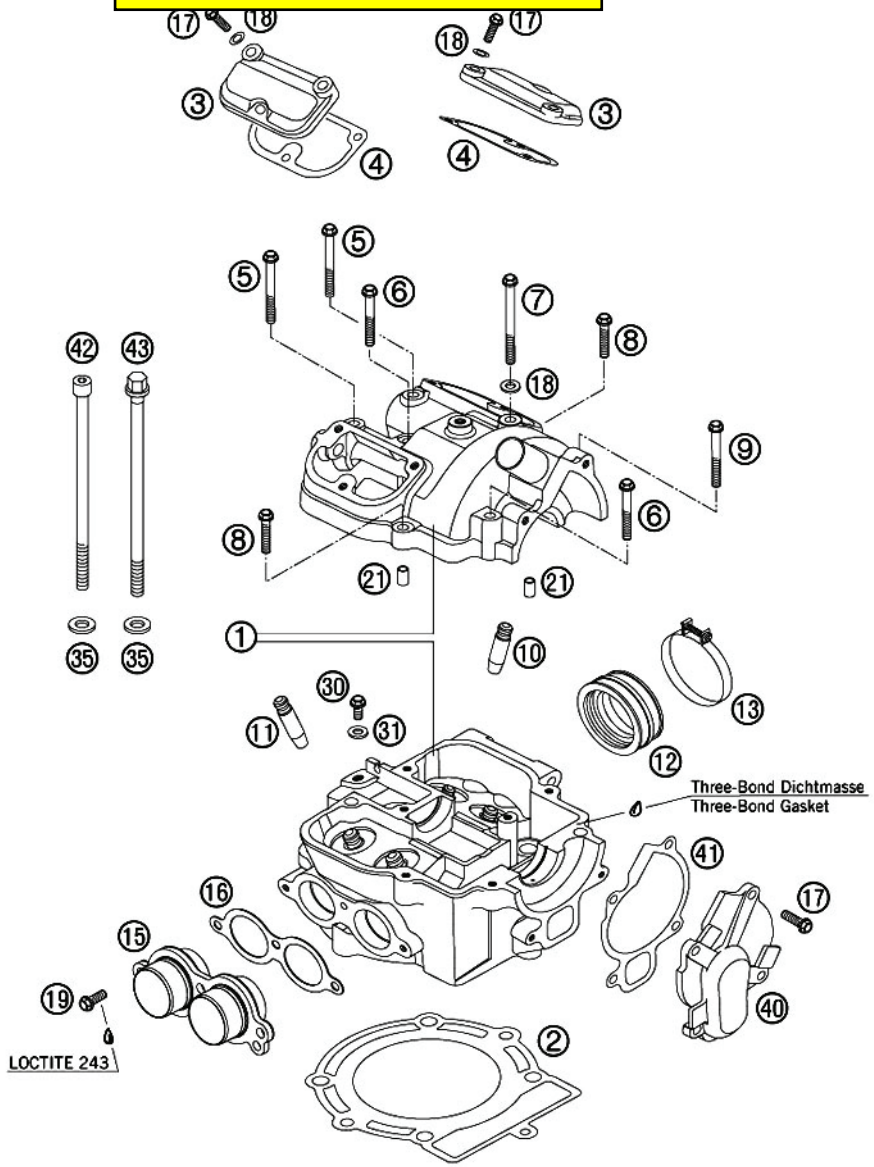

VERS.2007/2008
►PAG. 14, Pos. 1,43

TAV.7

Pos Loc Pos Ps Pos	Numero Number Numéro Nùmero Nummer	Nota Note Note Nota Anm.	Descrizione	Description	Désignation	Beschreibung	Descripciòn
21	3625220 000		Grano Di Riferimento 6 X 8 X 11,5	Dowel 6 X 8 X 11,5	Grain 6x8x11,5	Passhülse 6x8x11,5	Grano 6x8x11,5
30	3625316 000		Bullone Sfiato 6.10 Completo	Vent Screw M6x10 Cpl.	Boulon 6.10 Complet	Entlüftungsschraube M6x10 Kpl.	Tornillo 6.10 Completo
31	3625184 000		Guarnizione Bullone Scarico 6x10x2	Cu-Seal Ring 6x10x2	Joint Boulon 6x10x2	Cu-Dichtring 6x10x2	Junta Tornillo 6x10x2
35	3625348 000		Rondella 10,8x18,8x1,5	Washer 10,8x18,8x1,5	Rondelle 10,8x18,8x1,5	Scheibe 10,8x18,8x1,5	Arandela 10,8x18,8x1,5
40	3625308 000		Coperchio Pompa Acqua	Water Pump Cover	Couvercle Pompe Eau	Wasserpumpendeckel	Tapa Bomba Agua
41	3625309 000		Guarnizione Coperchio Pompa Acqua 0,8mm	Water Pump Cover Gasket 0,8mm	Joint Couvercle Pompe A Eau 0,8mm	Wasserpumpendeckel Dichtung 0,8mm	Junta Tapa Bomba Agua 0,8mm
42	3625067 000		Bullone Fis.Testa 250cc 10.150(10.9)	Ah Screw M10x150 10.9, 250cc	Boulon Fix. Culasse 250cc 10.150	Isk-Schr. M10x150 10.9 250cc	Tornillo Fijacion Culata 250cc 10.150
43	3625345 000		Bullone Fis.Testa 400/450/525cc 10.158	Screw M10x158 Ws.13, 400/450/525cc	Boulon Fix Culasse 400/450/525cc 10.158	Isk-Schr. M10x150 10.9 400/450/525cc	Tornillo Fij. Culata 400/450/525cc 10.158

2007/2008/2009 Versione/Version 400 - 450 - 525 cc

POS.	COD.BETA	DESCRIZIONE	DESCRIPTION
1	3625475 000	Testa Completa	Cylinder head cpl

2007/2008/2009 Versione/Version 525 cc

POS.	COD.BETA	DESCRIZIONE	DESCRIPTION
43	3625476 000	Bullone fissaggio testa 10x158	Screw 10x158

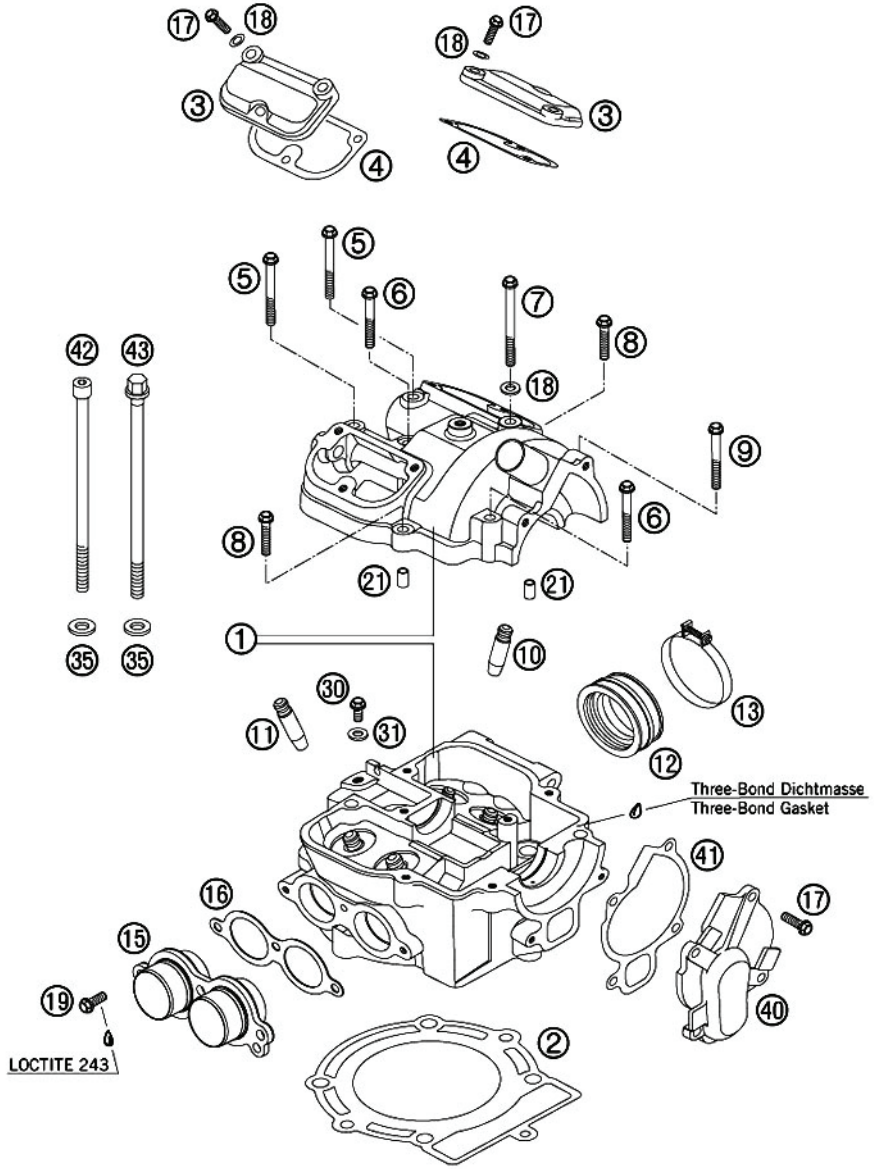

ALBERO BILANCIAMENTO VALVOLE E VALVOLE
VALVE DRIVE
VILEBREQUIN BALANCER VALVES ET VALVES
VENTILTRIEB
CIGUENAL BALANCA VÁLVULES Y VÁLVULES

250CC / 2005-2006

TAV.8

Pos Loc Pos Ps Pos	Numero Number Numéro Nùmero Nummer	Nota Note Note Nota Anm.	Descrizione	Description	Désignation	Beschreibung	Descripciòn
1	3625410 000		Valvola Aspirazione 28mm 250cc	Intake Valve 28mm 250cc	Valve Aspiration 28mm 250cc	Einlassventil 28mm	Valvula Aspiracion 28mm 250cc
2	3625411 000		Valvola Scarico 24mm 250cc	Exhaust Valve 24mm 250cc	Valve Vidange 24mm 250cc	Auslassventil 24mm	Valvula Escape 24mm 250cc
3	3625329 000		Gambo Valvole	Gambo Valves	Tige Valves	Ventilschaftdichtung	Brazo Valvulas
6	3625409 000		Molla Conica Completa Valvola 250cc	Valve Spring Conical Cpl. 250cc	Ressort Conique Compl. Valve 250cc	Ventilfedern Koni.Kpl.250cc	Muelle Conica Completa Valvula 250cc
9	3625416 000		Raccoglitore Valvole Mk6 250cc	Valve Collet Mk6 250cc	Ramasseur Valves Mk6 250cc	Ventilkegelstück Mk6	Envase Valvulas Mk6 250cc
10	3625343 000		Vite Di Regolazione Valvole 6.0,75	Adjustment Screw M6x0,75	Vis Regolation Valves 6.0,75	Einstellschraube M6x0,75	Tornillo Regolacion Valvulas 6.0,75
11	3625344 000		Dado 6.0,75	Nut M6x0,75	Ecrou 6.0,75	Mutter M6x0,75	Dado 6.0,75
13	3625336 000		Albero Bilancere Brac. Valv. Aspiraz	Rocker Arm Shaft Intake	Arbre Balancier Bras Valve Aspiration	Kipphebelachse Einlass	Ciguenal Balance Brazo Valvula Aspiracion
14	3625337 000		Albero Bilancere Brac. Valv. Scarico	Rocker Arm Shaft Exhaust	Arbre Balancier Bras Valve Vidange	Kipphebelachse Auslass	Ciguenal Balance Brazo Valvula Escape
15	3625341 000		Tappo Albero Bilancere Braccio Valvole	End Cap Rocker Arm Shaft	Bouchon Arbre Balancier Bras Valves	Endkappe Kipphebelachse	Tapa Ciguenal Balance Brazo Valvulas
16	3625055 000		Anello Or 19,10x1,60 Nbr 70	O Ring 19,10x1,60 Nbr70	Or 19,10x1,60 Nbr 70	O-Ring 19,10x1,60	Or 19,10x1,60 Nbr 70
17	3625339 000		Rondella Spessore In Allumnio 5,2x10x2	Shim Alu 5,2x10x2	Rondelle Epaisseur Alum. 5,2x10x2	Scheibe Alu 5,2x10x2	Arandela Espesor En Aluminio 5,2x10x2
18	3625063 000		Vite Tappo Alb. Bilac. Braccio Valv.5.08	Ah Screw M5x8	Vis Bouchon	Isk.Schraube M5x8	Tornillo Tapo Arbre Valvula 5.8
19	3625335 000		Albero Di Decompressione Completo	Decompression Shaft Cpl.	Arbre Decompression Complet	Dekowelle Kpl.	Ciguenal De Decompresion Completo
20	3625050 000		Anello Or 5,10x1,60 Nbr 70	O Ring 5,10x1,60 Nbr70	Or 5,10x1,60 Nbr 70	O-Ring 5,10x1,60	Or 5,10x1,60 Nbr 70
22	3625338 000		Molla Albero Decompressione	Decompression Lever Spring	Ressort Arbre Decompression	Dekohebelfeder	Muelle Ciguenal De Decompresion
23	3625030 000		Anello Seeger 8x0,8	Circlip 8x0,8	Bague Seeger 8x0,8	Sicherungsring 8x0,8	8x0,8
30	3625413 000		Braccio Valvola Aspirazione Compl. 250	Rocker Arm Intake Cpl. 250cc	Bras Valve Aspiration Compl. 250cc	Kipphebel Einlass Kpl 250cc	Brazo Valvula Aspiracion Compl. 250cc
31	3625414 000		Braccio Valvola Scarico Compl. 250cc	Rocker Arm Exhaust Cpl. 250cc	Bras Valve Vidange Compl. 250cc	Kipphebel Auslass Kpl 250cc	Brazo Valvula Escape Compl. 250cc

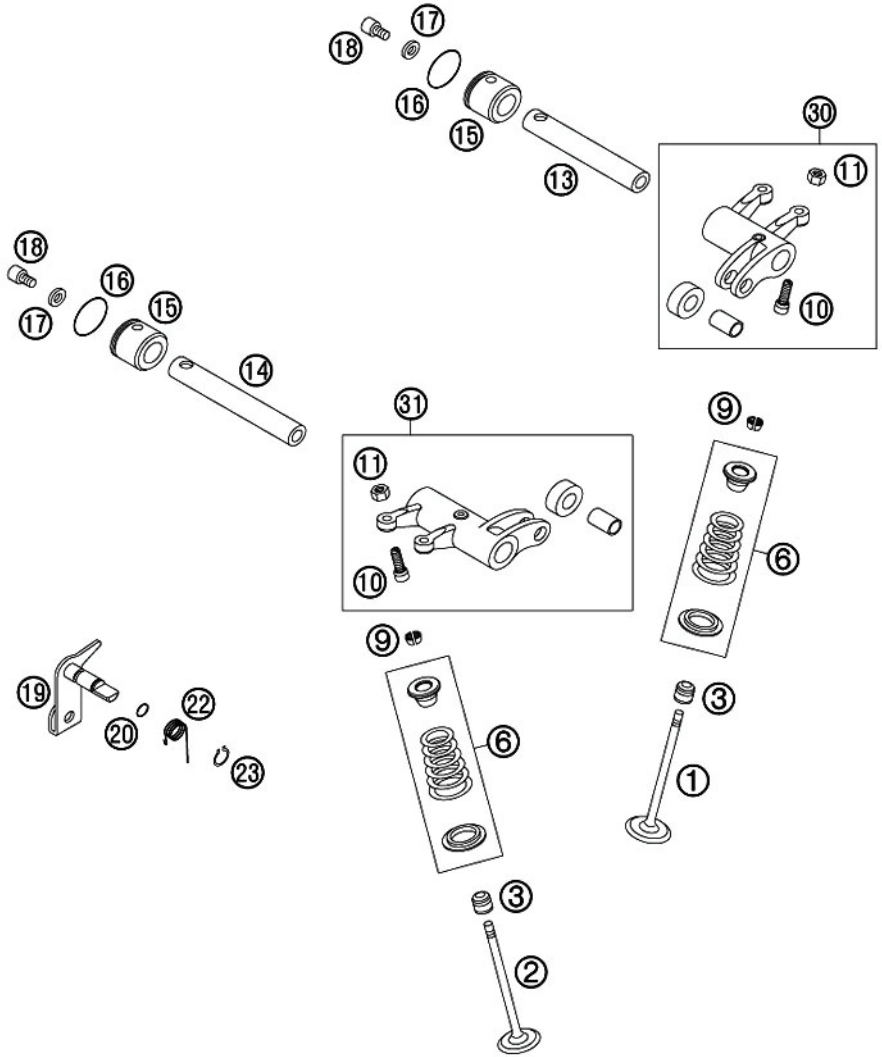

ALBERO BILANCIAMENTO VALVOLE E VALVOLE
VALVE DRIVE
VILEBREQUIN BALANCER VALVES ET VALVES
VENTILTRIEB
CIGUENAL BALANCA VÁLVULES Y VÁLVULES

400-450-525CC / 2005-2006

TAV.9

Pos Loc Pos Ps Pos	Numero Number Numéro Nùmero Nummer	Nota Note Note Nota Anm.	Descrizione	Description	Désignation	Beschreibung	Descripciòn
1	3625331 000		Valvola Aspirazione 35mm 400/450/525cc	Intake Valve 35mm 400/450/525cc	Valve Aspiration 35mm 400/450/525cc	Einlassventil 35mm	Valvula Aspiracion 35mm 400/450/525cc
2	3625332 000		Valvola Scarico 30mm 400/450/525cc	Exhaust Valve 30mm 400/450/525cc	Valve Vidange 30mm 400/450/525cc	Auslassventil 30mm	Valvula 30mm 400/450/525cc
3	3625329 000		Gambo Valvole	Gambo Valves	Tige Valves	Ventilschaftdichtung	Brazo Valvulas
6	3625330 000		Molla Conica Compl.Valvola 400/450/525cc	Valve Spring Conical Cpl. 400/450/525cc	Ressort Compl. Valve 400/450/525cc	Ventilfedern Koni.Kpl.400/450/525cc	Muelle Conica Compl. Valvula 400/450/525cc
9	3625333 000		Raccoglitore Valvole Kk6 400/450/525cc	Valve Collet Kk6 400/450/525cc	Ramasseur Valves Kk6 400/450/525cc	Ventilkegelstück Kk6h 400/450/525cc	Envase Valvulas Kk6 400/450/525cc
10	3625343 000		Vite Di Regolazione Valvole 6.0,75	Adjustment Screw M6x0,75	Vis Regolation Valves 6.0,75	Einstellschraube M6x0,75	Tornillo Regolacion Valvulas 6.0,75
11	3625344 000		Dado 6.0,75	Nut M6x0,75	Ecrou 6.0,75	Mutter M6x0,75	Dado 6.0,75
13	3625336 000		Albero Bilancere Brac. Valv. Aspiraz	Rocker Arm Shaft Intake	Arbre Balancier Bras Valve Aspiration	Kipphebelachse Einlass	Ciguenal Balance Brazo Valvula Aspiracion
14	3625337 000		Albero Bilancere Brac. Valv. Scarico	Rocker Arm Shaft Exhaust	Arbre Balancier Bras Valve Vidange	Kipphebelachse Auslass	Ciguenal Balance Brazo Valvula Escape
15	3625341 000		Tappo Albero Bilancere Braccio Valvole	End Cap Rocker Arm Shaft	Bouchon Arbre Balancier Bras Valves	Endkappe Kipphebelachse	Tapa Ciguenal Balance Brazo Valvulas
16	3625055 000		Anello Or 19,10x1,60 Nbr 70	O Ring 19,10x1,60 Nbr70	Or 19,10x1,60 Nbr 70	O-Ring 19,10x1,60	Or 19,10x1,60 Nbr 70
17	3625339 000		Rondella Spessore In Allumnio 5,2x10x2	Shim Alu 5,2x10x2	Rondelle Epaisseur Alum. 5,2x10x2	Scheibe Alu 5,2x10x2	Arandela Espesor En Aluminio 5,2x10x2
18	3625063 000		Vite Tappo Alb. Bilac. Braccio Valv.5.08	Ah Screw M5x8	Vis Bouchon	Isk.Schraube M5x8	Tornillo Tapo Arbre Valvula 5.8
19	3625335 000		Albero Di Decompressione Completo	Decompression Shaft Cpl.	Arbre Decompression Complet	Dekowelle Kpl.	Ciguenal De Decompresion Completo
20	3625050 000		Anello Or 5,10x1,60 Nbr 70	O Ring 5,10x1,60 Nbr70	Or 5,10x1,60 Nbr 70	O-Ring 5,10x1,60	Or 5,10x1,60 Nbr 70
22	3625338 000		Molla Albero Decompressione	Decompression Lever Spring	Ressort Arbre Decompression	Dekohebelfeder	Muelle Ciguenal De Decompresion
23	3625030 000		Anello Seeger 8x0,8	Circlip 8x0,8	Bague Seeger 8x0,8	Sicherungsring 8x0,8	8x0,8
30	3625340 000		Braccio Valvola Aspiraz.Cpl400/450/525cc	Rocker Arm Intake Cpl. 400/450/525cc	Bras Valve Aspiration Cpl 400/450/525cc	Kipphebel Einlass Kpl 400/450/525cc	Brazo Valvula Aspiracion 40/450/525cc
31	3625342 000		Braccio Valvola Scarico Cpl400/450/525cc	Rocker Arm Exhaust Cpl	Bras Valve Echappement Cpl400/450/525cc	Kipphebel Auslass Kpl 400/450/525cc	Brazo Valvula Escape 400/450/525cc

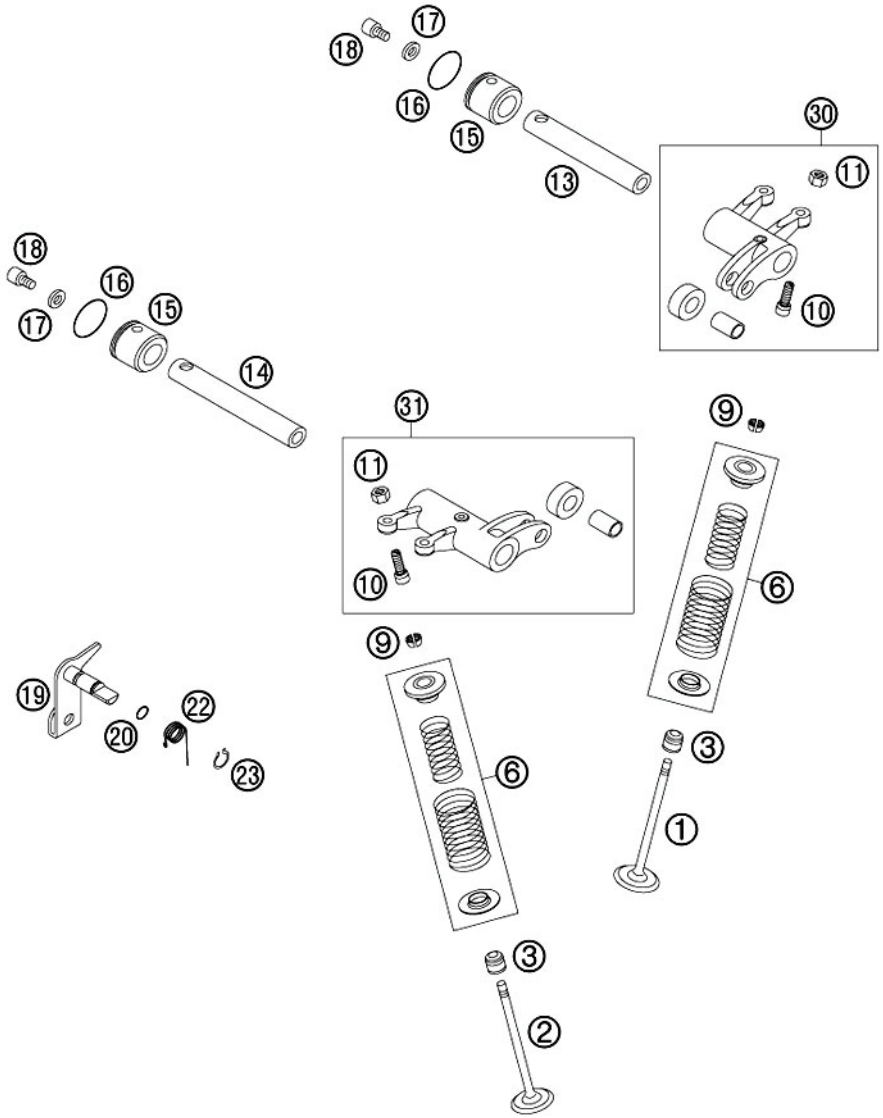

CATENA DI DISTRIBUZIONE
TIMING VALVE
CHAÎNE DE DISTRIBUTION
STEUERTRIEB
CADENA DISTRIBUCIÓN

250-400-450-525CC / 2005-2006

TAV.10

Pos Loc Pos Ps Pos	Numero Number Numéro Nùmero Nummer	Nota Note Note Nota Anm.	Descrizione	Description	Désignation	Beschreibung	Descripciòn
1	3625319 000		Catena Di Distribuzione(96)400/450/525cc	Timing Chain 96 Rolls, 400/450/525cc	Chaine De Distribution (96)400/450/525cc	Steuerkette 96 Rollen 400/450/525cc	Cadena De Distribucion(96) 400/450/525cc
1	3625407 000		Catena Di Distribuzione (94) 250cc	Timing Chain 94 Rolls, 250cc	Chaine De Distribution (94) 250cc	Steuerkette 94 Rollen 250cc	Cadena De Distribucion(94) 250cc
3	3625311 000		Guida Catena Di Distribuzione	Timing Chain Guide	Guide Chaine De Distribution	Steuerkettenführung	Guia Cadena De Distribucion
4	3625324 000		Guida Inferiore Catena Di Distribuzione	Securing Timing Chain Guide	Guide Inf. Chaine De Distribution	Ausfallsicherung	Guia Inf. Cadena De Distribucion
5	3625321 000		Ingranaggio Catena Trasmissione 18t	Timing Gear 18-T	Engranage Chaine Transmission 18t	Steuerritzel 18-Z	Engranaje Cadena Transmision 18t
6	3625313 000		Tensionatore Catena Trasmissione	Timing Chain Tensionener	Tendeur De Chaine Transmission	Steuerkettenspannerschiene	Tensor Cadena Transmision
7	3625315 000		Guarnizione Tensionatore Catena Trasmis.	Gasket Timing Chain Tensionener	Joint Tendeur Chaine Transmis.	Dichtung Steuerkettenspanner	Junta Tensor Cadena Transmision
8	3625314 000		Tensionatore Catena Trasmis. Completo	Timing Chain Tensionener Cpl Rac.	Tendeur Chaine Transmis. Complet	Steuerkettenspanner Kpl.	Tensor Cadena Transmision Completo
9	3625312 000		Distanziale 6,1x8,2x13,1	Spacer Bushing 6,1x8,2x13,1	Entretoise 6,1x8,2x13,1	Distanzbüchse 6,1x8,2x13,1	Distanciador 6,1x8,2x13,1
10	1149070 000		Bullone 6.20 Rs Ch 8	Bolt 6.20	Boulon 6.20 Rs Ch 8	Sk.Bundschraube M6x20 Sw=8	Tornillo 6.20 Rs Ch 8
11	3625005 000		Bullone 5.16 Rs Ch 8	Bolt 5.16	Boulon 5.16 Rs Ch 8	Sk.Bundschraube M5x16 Sw=8	Tornillo 5.16 Rs Ch 8
12	3625325 000		Distanz.Sup.Fis.Guida Inf.Catena Trasmis	Spacer Securing Guide	Entretoise Sup. Fix. Guide Inf. Chaine T	Stützhülse 5,2x7x10x7,7	Distanziador Sup. Fij. Guia Inf. Cadena Transmision
15	3625034 000		Guarnizione 6x10x1	Cu-Seal Ring 6x10x1	Joint 6x10c1	Cu-Dichtring 6x10x1	Junta 6x10x1
16	1150010 000		Bullone 6.25 Rs Ch 8	Bolt 6.25	Boulon 6.25 Rs Ch 8	Sk.Bundschraube M6x25 Sw=8	Tornillo 6.25 Rs Ch 8
17	1150300 000		Bullone 6.30 Rs Ch 8	Bolt 6.30	Boulon 6.30 Rs Ch 8	Sk.Bundschraube M6x30 Sw=8	Tornillo 6.30 Rs Ch 8
18	3625373 000		Distanziale	Spacer	Entretoise	Distanzbüchse	Distanciador
19	3625016 000		Rondella 6,4	Washer 6,4	Rondelle 6,4	Unterlegscheibe Din 125 A 6,4	Arandela 6,4
24	3625317 000		Albero A Camme 450/525cc	Camshaft 450/525cc	Arbre A Cames 450/525cc	Nockenwelle 450/525cc	Ciguenal A Cammas 450/525cc
24	3625383 000		Albero A Camme 400cc	Camshaft 400cc	Arbre A Cames 400cc	Nockenwelle 400cc	Ciguenal A Cammas 400cc
24	3625406 000		Albero A Camme 250cc	Camshaft 250cc	Arbre A Cames 250cc	Nockenwelle 250cc	Ciguenal A Cammas 250cc
26	3625318 000		Ingranaggio Albero A Camme	Camshaft Gear	Engranage Arbre A Cames	Nockenwellenrad	Engranaje Ciguenal A Cammas
27	3625322 000		Albero Auto Decompressione	Auto Decompression Shaft	Arbre Decompression	Autodekowelle	Ciguenal Decompresion
29	3625075 000		Vite 8.10	Ah Screw M8x10	Vis 8.10	Isk.Schraube M8x10	Tornillo 8.10
32	3625347 000		Rondella 26,7x34x1,3	Washer 26,7x34x1,3	Rondelle 26,7x34x1,3	Scheibe 26,7x34x1,3	Arandela 26,7x34x1,3
33	3625346 000		Supporto Guarnizione Ventola Pompa Acqua	Gasket Support	Support Joint Pompe Eau	Dichtungsträger	Soporte Junta Ventola Bombba Agua

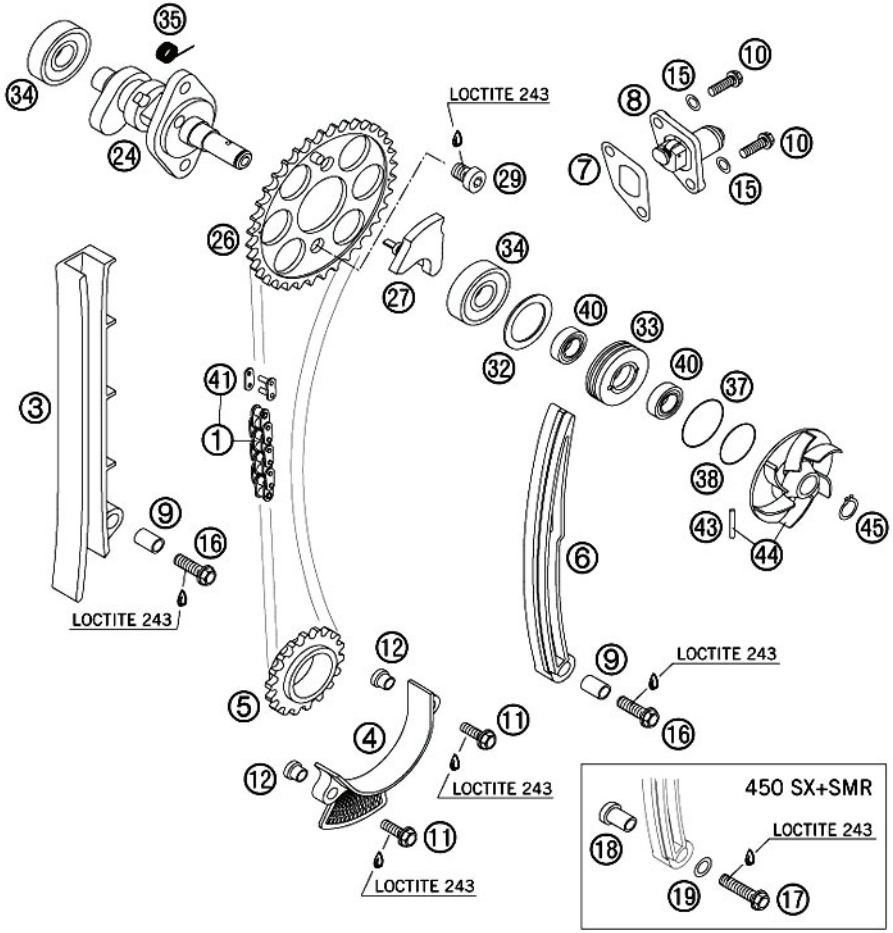

Pos Loc Pos Ps Pos	Numero Number Numéro Nùmero Nummer	Nota Note Note Nota Anm.	Descrizione	Description	Désignation	Beschreibung	Descripciòn
34	3625038 000		Cuscinetto A Sfere 6201	Ball. Bearing 6201	Roulement 6201	Rillenkugellager 6201	Cojinete 6201
35	3625323 000		Molla Per Autodecompressore	Spring For Autodecompression	Ressort	Feder Für Autodeko	Muelle
37	3625057 000		Anello Or 29,10x1,60 Nbr 70	O Ring 29,10x1,60 Nbr70	Or 29,10x1,60 Nbr 70	O-Ring 29,10x1,60	Or 29,10x1,60 Nbr 70
38	3625049 000		Anello Or 25,12x1,78 Nbr 70	O Ring 25,12x1,78 Nbr70	Or 25,12x1,78 Nbr 70	O-Ring 25,12x1,78	Or 25,12x1,78 Nbr 70
40	3625043 000		Anello Paraolio 10x18x4 Bsl	Shaft Seal Ring 10x18x4 Bsl	Joint Spy 10x18x4 Bsl	Wellendichtring 10x18x4	Junta Aceite 10x18x4
41	3625320 000		Maglia Giunzione Catena Trasmissione	Rivet Link For Timing Chain	Maille Chaine Transmission	Nietglied Für Steuerkette	Aganche Cadena Transmision
43	3625020 000		Rullino 3,0 X 17,8	Needle Roller 3 X 17,8	Molette 3,0 X17,8	Nadelrolle 3x17,8	Rodillo 3,0x17,8
44	3625310 000		Ventola Pompa Acqua Completa	Water Pump Wheel Cpl.	Ventilateur Pompe Eau Complete	Wasserpumpenrad Kpl.	Ventola Bomba Agua Completa
45	3625080 000		Anello Seeger 10x1	Circlip 10x1	Bague Seeger 10x1	Sicherungsring 10x1	Anillo Seeger 10x1

CATENA DI DISTRIBUZIONE
TIMING VALVE
CHAÎNE DE DISTRIBUTION
STEUERTRIEB
CADENA DISTRIBUCIÓN

250-400-450-525CC / 2005-2006

TAV.10

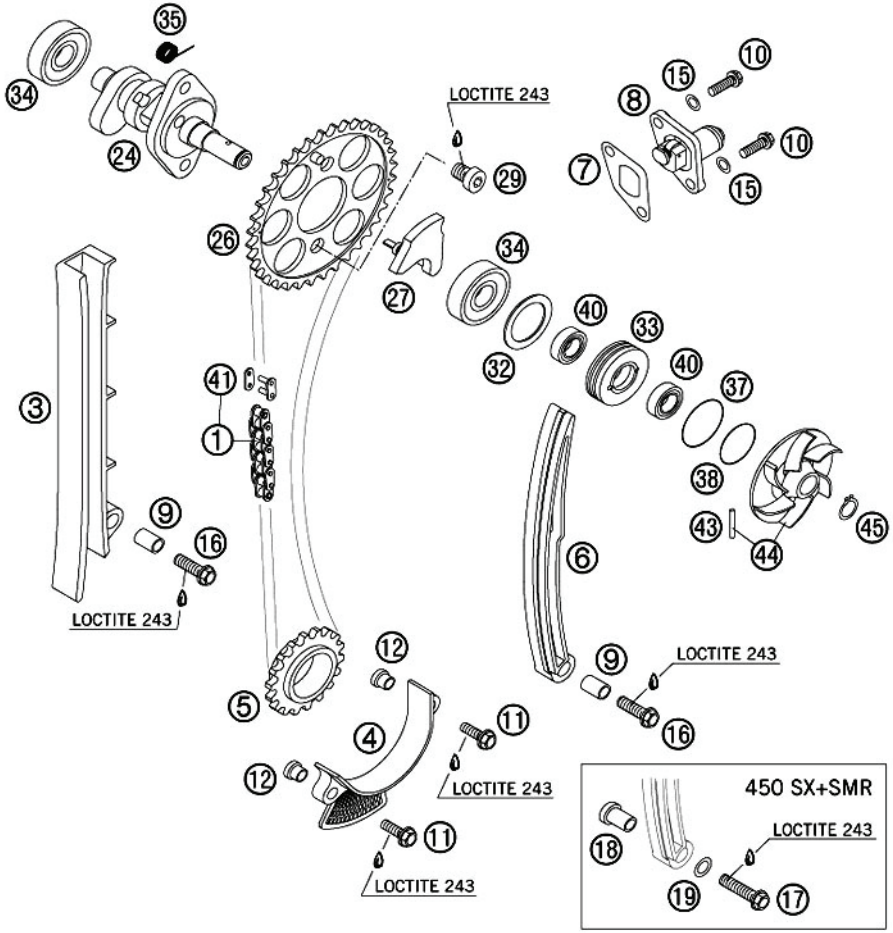

SISTEMA DI LUBRIFICAZIONE
LUBRICATING SYSTEM
POMPE À HUILE
SCHMIERSYSTEM
BOMBA DE ACEITE

250-400-450-525CC / 2005-2006

VERS.2007-'08-'09
►PAG. 19, Pos. 16

TAV.11

Pos Loc Pos Ps Pos	Numero Number Numéro Nùmero Nummer	Nota Note Note Nota Anm.	Descrizione	Description	Désignation	Beschreibung	Descripciòn
1	3625349 000		Albero Pompa Olio	Oil Pump Shaft	Arbre Pompe Huile	Ölpumpenwelle	Ciguenal Bomba Aceite
2	3625352 000		Rotore Completo Pompa Olio 10mm G-73r	Oilpump Rotor Cpl. 10mm G-73r	Rotor Complet Pompe Huile 10mm G-73r	Ölpumpenrotor Kpl. 10mm	Rotor Completo Bomba Aceite 10mm G-73r
3	3625353 000		Rotore Completo Pompa Olio 12mm G-95r	Oilpump Rotor Cpl. 10mm G-95r/003	Rotor Complet Pompe Huile 12mm G-95r	Ölpumpenrotor 12mm	Rotor Completo Bomba Aceite 12mm G-95r
4	3625196 000		Ingranaggio Pompa Olio 26-T	Oilpump Gear 26-T	Engranage Pompe Huile 26-T	Ölpumpenrad 26-Z	Engranaje Bomba Aceite 26-T
5	3625351 000		Coperchio Pompa Olio Sinistro	Oilpump Cover L/S	Couvercle Pompe Huile Gauche	Ölpumpendeckel Links	Tapa Bomba Aceite Izquierdo
6	3625350 000		Coperchio Pompa Olio Destro 8mm	Oilpump Cover Rs 8mm	Couvercle Pompe Huile Droit 8mm	Ölpumpendeckel Rechts 8mm	Tapa Bomba Aceite Derecho 8mm
7	3625005 000		Bullone 5.16 Rs Ch 8	Bolt 5.16	Boulon 5.16 Rs Ch 8	Sk.Bundschraube M5x16 Sw=8	Tornillo 5.16 Rs Ch 8
8	3625070 000		Vite 5.12	Ah Screw M5x12	Vis 5.12	Zyl.Schraube M5x12 8.8	Tornillo 5.12
11	3625360 000		Coperchio Filtro Olio	Oil Filer Cover	Couvercle Filtre Huile	Ölfilterdeckel	Tapa Filtro Aceite
12	3625185 000		Filtro Olio (Lungo)	Oil Filer (Long)	Filtre Huile (Long)	Ölfilter Lang	Filtro Aceite
13	3625361 000		Filtro Olio (Corto)	Oil Filer (Short)	Filtre Huile (Court)	Ölfilter Kurz	Filtro Aceite
14	3625023 000		Rullino 2,5 X 19,8	Needle Roller 2,5 X 19,8	Molette 2,5x19,8	Nadelrolle 2,5x19,8	Rodillo 2,5x19,8
15	3625022 000		Rullino 2,5 X 11,8	Needle Roller 2,5 X 11,8	Molette 2,5x11,8	Nadelrolle 2,5x11,8	Rodillo 2,5x11,8
16	3625191 000		Bullone Forato M8x1	Banjo Bolt M8x1	Boulon M8x1	Hohlschraube M8x1	Tornillo M8x1
17	3625358 000		Bullone Forato M8x1 Ch 12 100	Banjo Bolt M8x1 Ws.12 100	Boulon M8x1 Ch 12 100	Düsenschraube 100 M8x1 Sw=12	Tornillo M8x1 Ll.12 100
18	3625035 000		Guarnizione Olio 8x12x1	Seal Ring Cu 8x12x1	Joint Huile 8x12x1	Cu-Dichtring 8 X 12 X 1	Junta Aceite 8x12x1
19	3625359 000		Tubo Olio 400/450/525cc	Oil Pipe 400/450/525cc	Tube Huile 400/450/525cc	Ölleintung Stahl Gehäuse-Zkopf 400/450/525cc	Tubo Aceite 400/450/525cc
19	3625415 000		Tubo Olio 250cc	Oil Pipe 250cc	Tube Huile 250cc	Ölleintung Stahl Gehäuse-Zkopf 250cc	Tubo Aceite 250cc
20	3625059 000		Anello Or 40,00x2,50 Nbr 70	O Ring 40,00x2,50 Nbr70	Bague 40,00x2,50 Nbr 70	O-Ring 40 X 2,50	Or 40,00x2,50 Nbr 70
21	3625357 000		Tappo M20x1,5 Ch.13	Plug M20x1,5 Ws 13	Bouchon M20x1,5 Cl.13	Verschl.Schraube M20x1,5 Sw=13	Tapa M20x1,5 Ll.13
22	3625356 000		Filtro Olio 15x38mm	Oil Screen 15x38mm	Filtre Huile 15x38mm	Ölsieb 15x83mm	Filtro Aceite 15x38mm
23	3625053 000		Anello Or 12,5 X 1,5	O-Ring 12,5 X 1,5 Nbr	Bague 12,5x1,5	O-Ring 12,5 X 1,5	Or 12,5x1,5
24	3625048 000		Anello Or 17,17 X 1,78 Glo	O-Ring 17,17 X 1,78 Glo	Bague 17,17x1,78 Glo	O-Ring 17,17 X 1,78	Or 17,17x1,78 Glo
25	3625186 000		Rondella Serraggio Disco 8,1 X 15 X 0,5	Stop Disk 8,1 X 15 X 0,5	Rondelle Serrage Disque 8,1x15x0,5	Anlaufscheibe 8,1 X 15 X 0,5	Arandela Disque 8,1x15x0,5
26	3625060 000		Anello Seeger 6,0	Tab Washer 6,0	Bague Seeger 6,0	Sich.Scheibe 6,0	Seeger 6,0
27	3625192 000		Tampone In Gomma 8x17x10	Rubberbuffer 8x17x10	Tampon En Caoutchouc 8x17x10	Gummipuffer 8x17x10	Tampon En Goma 8x17x10

2007/2008/2009 Versione/Version 525 cc

POS.	COD.BETA	DESCRIZIONE	DESCRIPTION
16	3625477 000	Bullone forato	Bonjo bolt

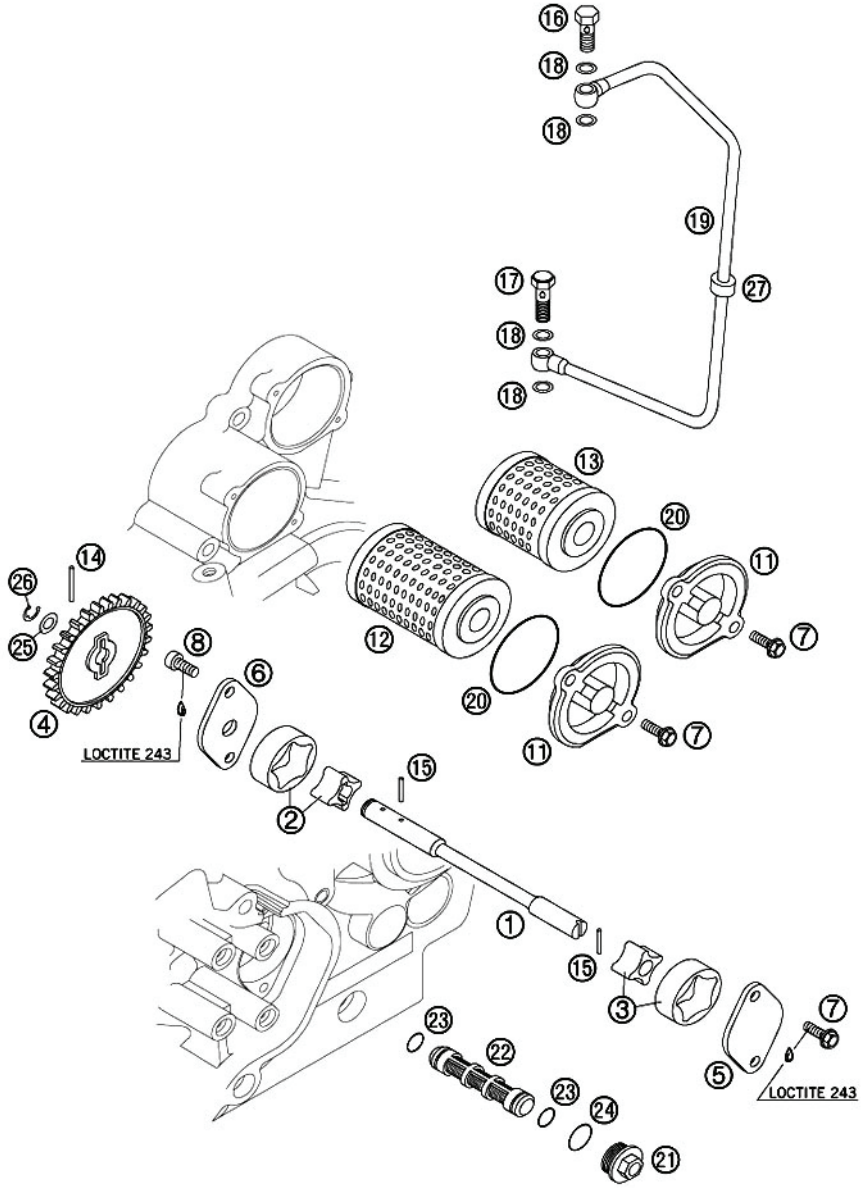

CARBURATORE FCR-MX37
CARBURETOR, FCR-MX37
CARBURATEUR FCR-MX37
VERGASER, FCR-MX37
CARBURADOR FCR-MX37

250CC / 2005-2006

TAV.12

Pos Loc Pos Ps Pos	Numero Number Numéro Nùmero Nummer	Nota Note Note Nota Anm.	Descrizione	Description	Désignation	Beschreibung	Descripciòn
1	1204901 000		Carburatore Motore 250 Rr4t	Carburettor, 250 Rr4t	Carburateur Moteur 250 Rr4t	Vergaser Keihin Fcr Rr4t 250cc	Carburador Motor 250 Rr4t
5	3625146 000		Coperchio Carburatore	Carburetor Cover	Couvercle Carburateur	Vergaserdeckel	Tapa Carburador
10	3625164 000		Piastrina Per Cablaggio Carburatore	Braket Plate For Thr.Cable	Plaquette Cablage Carburateur	Halteblech Für Gasseile	Placa Carburador
11	3625158 000		Vite M5 X 8	Screw M5 X 8	Vis M5x8	Schraube M5x8	Tornillo M5x8
12	3625155 000		Albero Completo Valvola Carburatore	Throttle Shaft Cpl	Arbre Complet Valve Carburateur	Seilzugrolle Kpl.	Arbre Completo Valvula Carburador
14	3625156 000		Molla Albero Compl. Valvola Carburatore	Throttle Shaft Spring	Ressort Arbre Compl. Valve Carburateur	Feder Seilzugrolle	Muelle Arbre Completo Valvula Carburador
16	3625150 000		Braccetto Connessione Valvola Carb.	Link Arm Throttle Valve Cpl	Bras Jonction Valve Carburateur	Gasschieberarm Kpl.	Brazo Conexion Valvula Carburador
18	3625241 000		Distanziale Limitazione Valvola Carb	Slide Stop	Entretoise Valve Carburateur	Schieberanschlag	Distanciador Valvula Carburador
19	3625149 000		Valvola A Farfalla Carburatore	Throttle Valve Cpl	Valve Carburateur	Gasschieber Kpl.	Valvula Carburador
20	3625249 000		Cuscinetto Valvola A Farfalla Carb.	Bushing Throttle Valve	Roulement Valve Carburateur	Lagerrolle Gasschieber	Cojinete Valvula Carburador
21	3625151 000		Guarnizione Piastra Valvola A Farf.Carb.	Gasket, Throttle Valve Plate	Joint Plaque Valve Carburateur	Dichtpl. Gassch. Fcr-Mx	Junta Placa Valvula Carburador
22	3625250 000		Rondella Piastra Valvola A Farf.Carb	Washer, Throttle Valve Plate	Rondelle Plaque Valve Carburateur	Dichtscheibe Gasschieber	Arandela Place Valvula Carburador
23	3625148 000		Spillo Keihin Obekt	Jet Needle Keihin Obekt	Epingle Keihin Obekt	Düsennadel Keihin Obekt	Aguja Keihin Obekt
23	3625244 000		Spillo Keihin Obetn	Jet Needle Keihin Obetn	Epingle Keihin Obetn	Düsennadel Keihin Obetn	Aguja Keihin Obetn
24	3625240 000		Anello Fissaggio Spillo Carburatore	Bar Clip	Bague Fixage Epingle Carburateur	Nadelclip	Anillo Fijacion Aguja Carburador
25	3625147 000		Kit Viti Fissaggio Spillo Carburatore	Needle Set Screw Cpl.	Jeu Vis Fixage Epingle Carburateur	Nadelschraube Kpl.	Juego Tornillos Fijacion Aguja Carburador
26	3625256 000		Sede Spillo Carburatore	Needle Jet Fcr-Mx	Place Epingle Carburateur	Nadeldüse Fcr-Mx	Sede Aguja Carburador
27	3625104 000		Getto Massimo 155 Keihin	Main Jet 155 Keihin	Jet Max 155 Keihin	Hauptdüse Gr.155 Keihin	Difusor Maximo 155 Keihin
27	3625105 000		Getto Massimo 158 Keihin	Main Jet 158 Keihin	Jet Max 158 Keihin	Hauptdüse Gr.158 Keihin	Difusor Maximo 158 Keihin
27	3625106 000		Getto Massimo 160 Keihin	Main Jet 160 Keihin	Jet Max 160 Keihin	Hauptdüse Gr.160 Keihin	Difusor Maximo 160 Keihin
27	3625107 000		Getto Massimo 162 Keihin	Main Jet 162 Keihin	Jet Max 162 Keihin	Hauptdüse Gr.162 Keihin	Difusor Maximo 162 Keihin
27	3625108 000		Getto Massimo 165 Keihin	Main Jet 165 Keihin	Jet Max 165 Keihin	Hauptdüse Gr.165 Keihin	Difusor Maximo 165 Keihin
27	3625109 000		Getto Massimo 168 Keihin	Main Jet 168 Keihin	Jet Max 168 Keihin	Hauptdüse Gr.168 Keihin	Difusor Maximo 168 Keihin
27	3625110 000		Getto Massimo 170 Keihin	Main Jet 170 Keihin	Jet Max 170 Keihin	Hauptdüse Gr.170 Keihin	Difusor Maximo 170 Keihin
28	3625100 000		Getto 38 Per Carburatore Keihin	Idle Jet 38 Keihin	Jet 38 Pour Carburateur Keihin	Leerlaufdüse Gr.38 Keihin	Difusor 38 Carburador Krihin
28	3625101 000		Getto 40 Per Carburatore Keihin	Idle Jet 40 Keihin	Jet 40 Carburateur Keihin	Leerlaufdüse Gr.40 Keihin	Difusor 40 Carburador Keihin
28	3625102 000		Getto 42 Per Carburatore Keihin	Idle Jet 42 Keihin	Jet 42 Pour Carburateur Keihin	Leerlaufdüse Gr.42 Keihin	Difusor 42 Carburador Keihin

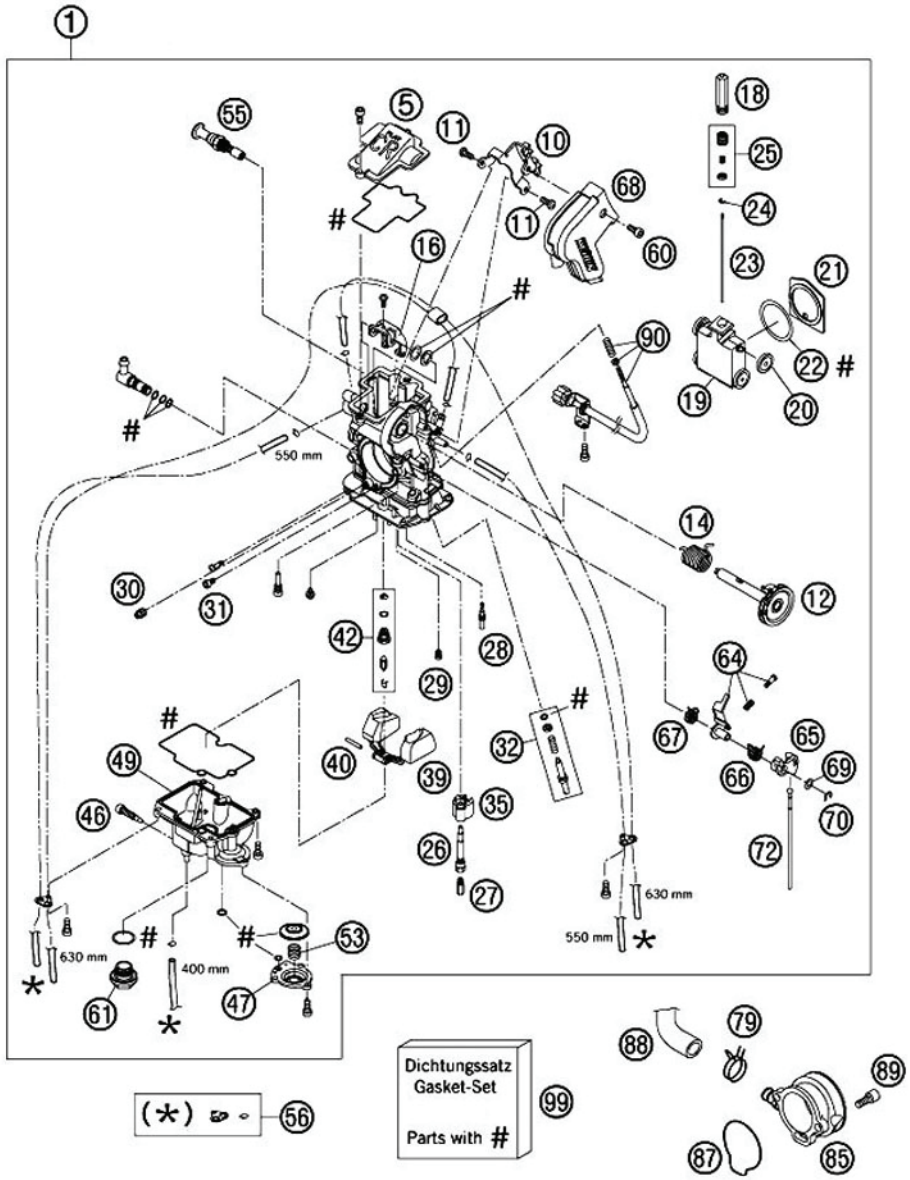

Pos Loc Pos Ps Pos	Numero Number Numéro Nùmero Nummer	Nota Note Note Nota Anm.	Descrizione	Description	Désignation	Beschreibung	Descripciòn
28	3625103 000		Getto 45 Per Carburatore Keihin	Idle Jet 45 Keihin	Jet 45 Carburateur Keihin	Leerlaufdüse Gr.45 Keihin	Difusor 45 Carburador Keihin
28A	3625119 000		Fermo Per Spillo Carburatore Keihin	Needle Set Screw	Arret Epingle Carburateur Keihin	Nadelschraube Kpl.	Parado Aguja Carburador Keihin
29	3625253 000		Getto Starter 85 Per Carburatore Keihin	Starter Jet 85 Keihin	Jet Starter 85 Carburateur Keihin	Startdüse 85	Difusor Starter 85 Carburador Keihin
30	3625139 000		Getto Aria 100 Per Carburatore Keihin	Idle Air Jet 100 Keihin	Jet Air 100 Carburateur Keihin	Leerlauffuftdüse Gr.100 Keihin	Difusor Aire 100 Carburador Keihin
31	3625152 000		Getto Aria 200 Per Carburatore Keihin	Idle Air Jet 200 Keihin	Jet Air 200 Carburateur Keihin	Hauptluftdüse Gr.200 Keihin	Difusor Aire 200 Carburador Keihin
32	3625237 000		Kit Viti Cpl Fcr Per Carburatore Keihin	Adjust Screw Cpl. Fcr-Mx	Jeu Vis Cpl Fcr Carburateur Keihin	Gemischregulierschr. Kpl.Fcr-Mx	Juego Tornillos Carburador Keihin
35	3625166 000		Piastra Tampone Per Carburatore Keihin	Buffer Plate	Plaque Tampon Carburateur Keihin	Dämpfungskörper	Placa Tampon Carburador Keihin
39	3625141 000		Galleggiante Cpl Per Carburatore Keihin	Float Cpl	Flottant Cpl Carburateur Keihin	Schwimmer Kpl.	Flotante Carburador Keihin
40	3625140 000		Perno X Galleggiante Carburatore Keihin	Arm Pin Float	Pivot Flottant Carburateur Keihin	Stift Schwimmer	Eje Flotante Carburador Keihin
42	3625144 000		Kit Valvole Spillo Carburatore Keihin	Needle Valve Cpl	Kit Valves Aiguille Carburateur Keihin	Schwimmernadelventil Kpl.	Juego Valvulas Aguja Carburador Keihin
46	3625170 000		Vite Galleg. Spec. Carburatore Keihin	Drain Screw Float Chamber	Vis Flottant Spec. Carburateur Keihin	Ablasschraube Schwimmergeh.	Tornillo Flotante Espec. Carburador Keihin
47	3625161 000		Coperchio Pompa Accellerat. Carb. Keihin	Cover Accelerator Pump	Couvercle Pompe Acc. Carburateur Keihin	Gehäuse Beschleunigerpumpe	Tapa Bomba Acelerador Carburador Keihin
49	3625142 000		Camera Galleggiante Carburatore Keihin	Float Chamber	Flottant Carburateur Keihin	Schwimmergehäuse	Cama Flotante Carburador Keihin
53	3625254 000		Molla Pompa Carburatore Keihin	Coil Spring	Ressort Pompe Carburateur Keihin	Druckfeder	Muelle Bomba Carburador Keihin
55	3625157 000		Valvola Starte Cpl Carburatore Keihin	Starter Valve Cpl.	Valve Cpl Carburateur Keihin	Kaltstartbetätigung Kpl.	Valvula Starter Completa Carburador Keihin
56	3625168 000		Tubi Con Piastr. Fcr Compl. Carb.Keihin	Breath Hose Fcr-Mx Keihin Cpl.	Tubes A/Plaqueete Fcr Compl. Carb. Keihi	Entl.Schl. Fcr-Mx Keihin Kpl.	Tubos Con Placa Completo Carburador Keihin
60	3625154 000		Vite Coperchio Cpl Carburatore Keihin	Screw F. Cover	Vis Couvercle Cpl Carburateur Keihin	Schraube F.Abdeckung Keihin	Tornillo Tapa Carburador Keihin
61	3625143 000		Tappo Vaschetta Livello Benz.Carb.Keihin	Holding Bolt	Bouchon Cuvette Niveau Ess. Carb. Keihin	Verschlusschraube	Tapon Deposito Nivel Gasolina Carburador Keihin
64	3625163 000		Leva Interm. Completa Carburatore Keihin	Intermediate Lever Cpl	Levier Complete Carburateur Keihin	Verbindungshebel Kpl.	Palanca Completa Carburador Keihin
65	3625159 000		Connessione Leva Carburatore Keihin	Link Lever	Jonction Levier Carburateur Keiin	Anlenkhebel	Conexion Palanca Carburador Keihin
66	3625160 000		Molla Connes. Leva Carburatore Keihin	Spring Link Lever	Ressort Levier Carburateur Keihin	Feder Anlenkhebel	Muelle Conexion Palanca Carburador Keihin

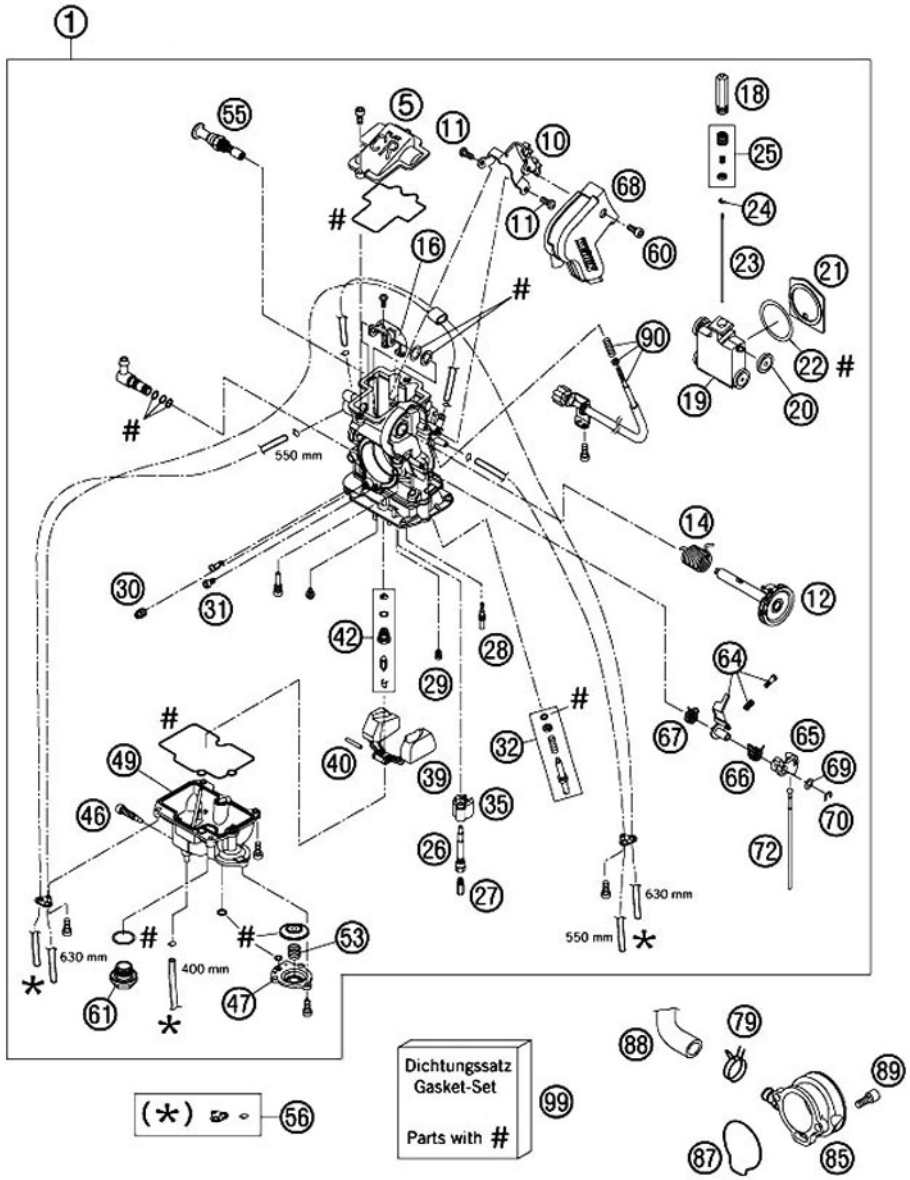

Pos Loc Pos Ps Pos	Numero Number Numéro Nùmero Nummer	Nota Note Note Nota Anm.	Descrizione	Description	Désignation	Beschreibung	Descripciòn
67	3625171 000		Molla Interm. Leva Carburatore Keihin	Spring Intermediate Lever	Ressort Levier Carburateur Keihin	Feder Verbindungshebel	Muelle Palanca Carburador Keihin
68	3625153 000		Coperchio Cablag. Carburatore Keihin	Carburetor Cover	Couvercle Cablage Carburateur Keihin	Vergaser Abdeckung	Tapa Carburador Keihin
69	3625167 000		Rondella Connetore Leva Carb. Keihin	Washer Link Lever Carburatore Keihin	Rondelle Connecteur Levier Carb. Keihin	Scheibe Anlenkhebel	Arandela Conector Palanca Carburador Keihin
70	3625165 000		Anello Seeger	E-Clip	Bague Seeger	Sicherungsscheibe E-Form	Anillo Seeger
72	3625162 000		Asta Pompa Accelleratore Carb. Keihin	Rod Accelerator Pump	Etrier Pompe Acc. Carburateur Keihin	Gestänge Beschleunigerpumpe	Asta Bomba Acelerador Carburador Keihin
79	3625195 000		Anello Stringitubo Carb. Keihin	Ydnac-Clamp 16mm	Bague Tube Carburateur Keihin	Ydnac-Klammer 10173 (16mm)	Anillo Tubo Carburador Keihin
85	2719792 000		Raccordo Carbur. Mot.250/400/450/525 Exc	Intake Funnel	Raccord Carbur. Mot. 250/400/450/525 Exc	Ansaugtrichter Fcr Seitlich Offen	Enlace Carburador Motor 250/400/450/525 Exc
87	1067364 000		Anello Or Motore 250/400/450/525 Exc	O-Ring	Bague Moteur 250/400/450/525 Exc	O-Ring Für Ansaugtrichter	Or 250/400/450/525 Exc
88	3625252 000		Tubo Sfiato Motore	Engine Breather Tube	Tube Moteur	Motorentlüftungsschlauch	Tubo Motor
89	3625064 000		Vite M5x12	Ah Screw M5x12	Vis M5x12	Isk.Schraube M5x12	Tornillo M5x12
90	3625145 000		Kit Viti Stop Carburatore Keihin	Stop Screw Cpl Fcr-Mx	Jeu Vis Stop Carburateur Keihin	Stellschraube Kpl. Fcr-Mx	Juego Tornillos Stop Carburador Keihin
99	3625169 000		Kit Guarnizioni Carburatore Keihin	Gasket Set Fcr-Mx	Jeu Joints Carburateur Keihin	Dichtungssatz	Juego Junta Carburador Keihin

CARBURATORE FCR-MX37
CARBURETOR, FCR-MX37
CARBURATEUR FCR-MX37
VERGASER, FCR-MX37
CARBURADOR FCR-MX37

250CC / 2005-2006

TAV.12

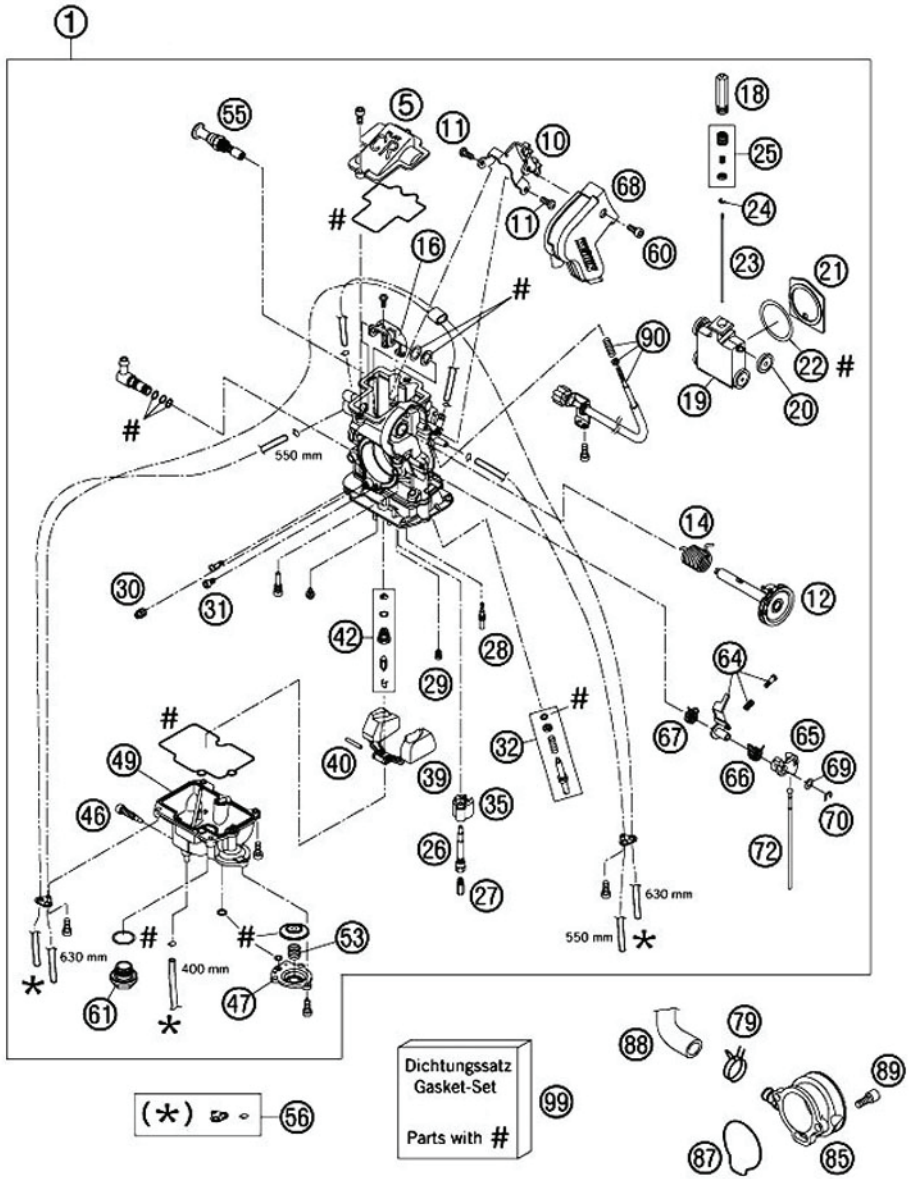

VERS.2007-'08-09 ►PAG. 25
Pos. 42,85,87,96

TAV.13

Pos Loc Pos Ps Pos	Numero Number Numéro Nùmero Nummer	Nota Note Note Nota Anm.	Descrizione	Description	Désignation	Beschreibung	Descripciòn
1	1204902 000		Carburatore Motore 450 Exc	Carburettor, 450 Exc	Carburateur Moteur 450 Exc	Vergaser Keihin Fcr Mx-39 450cc	Carburador Motor 450 Exc
1	1204904 000		Carburatore Motore 525 Exc	Carburettor, 525 Exc	Carburateur Moteur 525 Exc	Vergaser Keihin Fcr Mx-39 525cc	Carburador Motor 525 Exc
1	1204906 000		Carburatore Motore 400 Exc	Carburettor, 400 Exc	Carburateur Moteur 400 Exc	Vergaser Keihin Fcr Mx-39 400cc	Carburador Motor 400 Exc
5	3625146 000		Coperchio Carburatore	Carburetor Cover	Couvercle Carburateur	Vergaserdeckel	Tapa Carburador
10	3625164 000		Piastrina Per Cablaggio Carburatore	Carburetor Cover	Plaquette Cablage Carburateur	Halteblech Für Gasseile	Placa Carburador
11	3625158 000		Vite M5 X 8	Screw M5 X 8	Vis M5x8	Schraube M5x8	Tornillo M5x8
12	3625155 000		Albero Completo Valvola Carburatore	Throttle Shaft Cpl	Arbre Complet Valve Carburateur	Seilzugrolle Kpl.	Arbre Completo Valvula Carburador
14	3625156 000		Molla Albero Compl. Valvola Carburatore	Throttle Shaft Spring	Ressort Arbre Compl. Valve Carburateur	Feder Seilzugrolle	Muelle Arbre Completo Valvula Carburador
16	3625150 000		Braccetto Connessione Valvola Carb.	Link Arm Throttle Valve Cpl	Bras Jonction Valve Carburateur	Gasschieberarm Kpl.	Brazo Conexion Valvula Carburador
18	3625241 000		Distanziale Limitazione Valvola Carb	Slide Stop	Entretoise Valve Carburateur	Schieberanschlag	Distanciador Valvula Carburador
19	3625149 000		Valvola A Farfalla Carburatore	Throttle Valve Cpl	Valve Carburateur	Gasschieber Kpl.	Valvula Carburador
20	3625249 000		Cuscinetto Valvola A Farfalla Carb.	Bushing Throttle Valve	Roulement Valve Carburateur	Lagerrolle Gasschieber	Cojinete Valvula Carburador
21	3625151 000		Guarnizione Piastra Valvola A Farf.Carb.	Gasket, Throttle Valve Plate	Joint Plaque Valve Carburateur	Dichtpl. Gassch. Fcr-Mx	Junta Placa Valvula Carburador
22	3625250 000		Rondella Piastra Valvola A Farf.Carb	Washer, Throttle Valve Plate	Rondelle Plaque Valve Carburateur	Dichtscheibe Gasschieber	Arandela Place Valvula Carburador
23A	3625119 000		Fermo Per Spillo Carburatore Keihin	Needle Set Screw	Arret Epingle Carburateur Keihin	Nadelschraube Kpl.	Parado Aguja Carburador Keihin
23	3625248 000		Spillo Obdtr Carbutaore Keihin Rr 4t	Jet Needle Obdtr Keihin	Epingle Obdtr Carburateur Keihin Rr4t	Düsennadel Keihin Obdtr	Aguja Obdtr Carburador Keihin Rr4t
23	3625420 000		Spillo Obdvr Carbutaore Keihin Rr 4t	Jet Needle Obdvr Keihin	Epingle Obdvr Carburateur Keihin Rr4t	Düsennadel Keihin Obdvr	Aguja Obdvr Carburador Keihin Rr4t
24	3625240 000		Anello Fissaggio Spillo Carburatore	Bar Clip	Bague Fixage Epingle Carburateur	Nadelclip	Anillo Fijacion Aguja Carburador
25	3625147 000		Kit Viti Fissaggio Spillo Carburatore	Needle Set Screw Cpl.	Jeu Vis Fixage Epingle Carburateur	Nadelschraube Kpl.	Juego Tornillos Fijacion Aguja Carburador
26	3625256 000		Sede Spillo Carburatore	Needle Jet Fcr-Mx	Place Epingle Carburateur	Nadeldüse Fcr-Mx	Sede Aguja Carburador
27	3625110 000		Getto Massimo 170 Keihin	Main Jet 170 Keihin	Jet Max 170 Keihin	Hauptdüse Gr.170 Keihin	Difusor Maximo 170 Keihin
27	3625111 000		Getto Massimo 172 Keihin	Main Jet 172 Keihin	Jet Max 172 Keihin	Hauptdüse Gr.172 Keihin	Difusor Maximo 172 Keihin
27	3625112 000		Getto Massimo 175 Keihin	Main Jet 175 Keihin	Jet Max 175 Keihin	Hauptdüse Gr.175 Keihin	Difusor Maximo 175 Keihin
27	3625113 000		Getto Massimo 178 Keihin	Main Jet 178 Keihin	Jet Max 178 Keihin	Hauptdüse Gr.178 Keihin	Difusor Maximo 178 Keihin
27	3625114 000		Getto Massimo 180 Keihin	Main Jet 180 Keihin	Jet Max 180 Keihin	Hauptdüse Gr.180 Keihin	Difusor Maximo 180 Keihin
27	3625115 000		Getto Massimo 182 Keihin	Main Jet 182 Keihin	Jet Max 182 Keihin	Hauptdüse Gr.182 Keihin	Difusor Maximo 182 Keihin

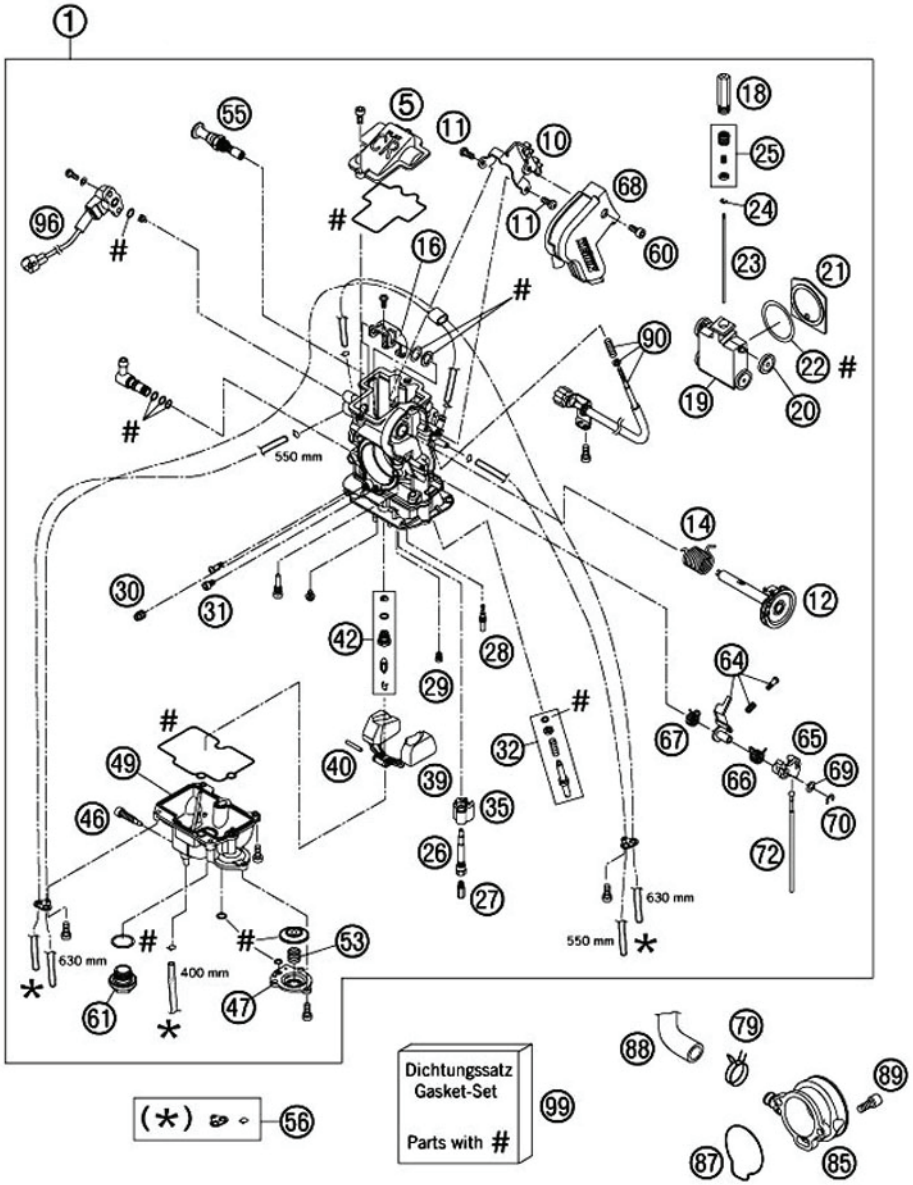

VERS.2007-'08-'09 ►PAG. 25
Pos. 42,85,87,96

TAV.13

Pos Loc Pos Ps Pos	Numero Number Numéro Nùmero Nummer	Nota Note Note Nota Anm.	Descrizione	Description	Désignation	Beschreibung	Descripciòn
27	3625116 000		Getto Massimo 185 Keihin	Main Jet 185 Keihin	Jet Max 185 Keihin	Hauptdüse Gr.185 Keihin	Difusor Maximo 185 Keihin
27	3625117 000		Getto Massimo 188 Keihin	Main Jet 188 Keihin	Jet Max 188 Keihin	Hauptdüse Gr.188 Keihin	Difusor Maximo 188 Keihin
27	3625118 000		Getto Massimo 190 Keihin	Main Jet 190 Keihin	Jet Max 190 Keihin	Hauptdüse Gr.190 Keihin	Difusor Maximo 188 Keihin
28	3625102 000		Getto 42 Per Carburatore Keihin	Idle Jet 42 Keihin	Jet 42 Pour Carburateur Keihin	Leerlaufdüse Gr.42 Keihin	Difusor 42 Carburador Keihin
28	3625103 000		Getto 45 Per Carburatore Keihin	Idle Jet 45 Keihin	Jet 45 Carburateur Keihin	Leerlaufdüse Gr.45 Keihin	Difusor 45 Carburador Keihin
29	3625253 000		Getto Starter 85 Per Carburatore Keihin	Starter Jet 85 Keihin	Jet Starter 85 Carburateur Keihin	Startdüse 85	Difusor Starter 85 Carburador Keihin
30	3625139 000		Getto Aria 100 Per Carburatore Keihin	Idle Air Jet 100 Keihin	Jet Air 100 Carburateur Keihin	Leerlaufluftdüse Gr.100 Keihin	Difusor Aire 100 Carburador Keihin
31	3625152 000		Getto Aria 200 Per Carburatore Keihin	Idle Air Jet 200 Keihin	Jet Air 200 Carburateur Keihin	Hauptluftdüse Gr.200 Keihin	Difusor Aire 200 Carburador Keihin
32	3625237 000		Kit Viti Cpl Fcr Per Carburatore Keihin	Adjust Screw Cpl. Fcr-Mx	Jeu Vis Cpl Fcr Carburateur Keihin	Gemischregulierschr. Kpl.Fcr-Mx	Juego Tornillos Carburador Keihin
35	3625166 000		Piastra Tampone Per Carburatore Keihin	Buffer Plate	Plaque Tampon Carburateur Keihin	Dämpfungskörper	Placa Tampon Carburador Keihin
39	3625141 000		Galleggiante Cpl Per Carburatore Keihin	Float Cpl	Flottant Cpl Carburateur Keihin	Schwimmer Kpl.	Flotante Carburador Keihin
40	3625140 000		Perno X Galleggiante Carburatore Keihin	Arm Pin Float	Pivot Flottant Carburateur Keihin	Stift Schwimmer	Eje Flotante Carburador Keihin
42	3625144 000		Kit Valvole Spillo Carburatore Keihin	Needle Valve Cpl	Kit Valves Aiguille Carburateur Keihin	Schwimmernadelventil Kpl.	Juego Valvulas Aguja Carburador Keihin
46	3625170 000		Vite Galleg. Spec. Carburatore Keihin	Drain Screw Float Chamber	Vis Flottant Spec. Carburateur Keihin	Ablasschraube Schwimmergeh.	Tornillo Flotante Espec. Carburador Keihin
47	3625161 000		Coperchio Pompa Accellerat. Carb. Keihin	Cover Accelerator Pump	Couvercle Pompe Acc. Carburateur Keihin	Gehäuse Beschleunigerpumpe	Tapa Bomba Acelerador Carburador Keihin
49	3625142 000		Camera Galleggiante Carburatore Keihin	Float Chamber	Flottant Carburateur Keihin	Schwimmergehäuse	Cama Flotante Carburador Keihin
53	3625254 000		Molla Pompa Carburatore Keihin	Coil Spring	Ressort Pompe Carburateur Keihin	Druckfeder	Muelle Bomba Carburador Keihin
55	3625157 000		Valvola Starte Cpl Carburatore Keihin	Starter Valve Cpl.	Valve Cpl Carburateur Keihin	Kaltstartbetätigung Kpl.	Valvula Starter Completa Carburador Keihin
56	3625168 000		Tubi Con Piastr. Fcr Compl. Carb.Keihin	Breath Hose Fcr-Mx Keihin Cpl.	Tubes A/Plaqueete Fcr Compl. Carb. Keihi	Entl.Schl. Fcr-Mx Keihin Kpl.	Tubos Con Placa Completo Carburador Keihin
60	3625154 000		Vite Coperchio Cpl Carburatore Keihin	Screw F. Cover	Vis Couvercle Cpl Carburateur Keihin	Schraube F.Abdeckung Keihin	Tornillo Tapa Carburador Keihin
61	3625143 000		Tappo Vaschetta Livello Benz.Carb.Keihin	Holding Bolt	Bouchon Cuvette Niveau Ess. Carb. Keihin	Verschlusschraube	Tapon Deposito Nivel Gasolina Carburador Keihin
64	3625163 000		Leva Interm. Completa Carburatore Keihin	Intermediate Lever Cpl	Levier Complete Carburateur Keihin	Verbindungshebel Kpl.	Palanca Completa Carburador Keihin
65	3625159 000		Connessione Leva Carburatore Keihin	Link Lever	Jonction Levier Carburateur Keiin	Anlenkhebel	Conexion Palanca Carburador Keihin

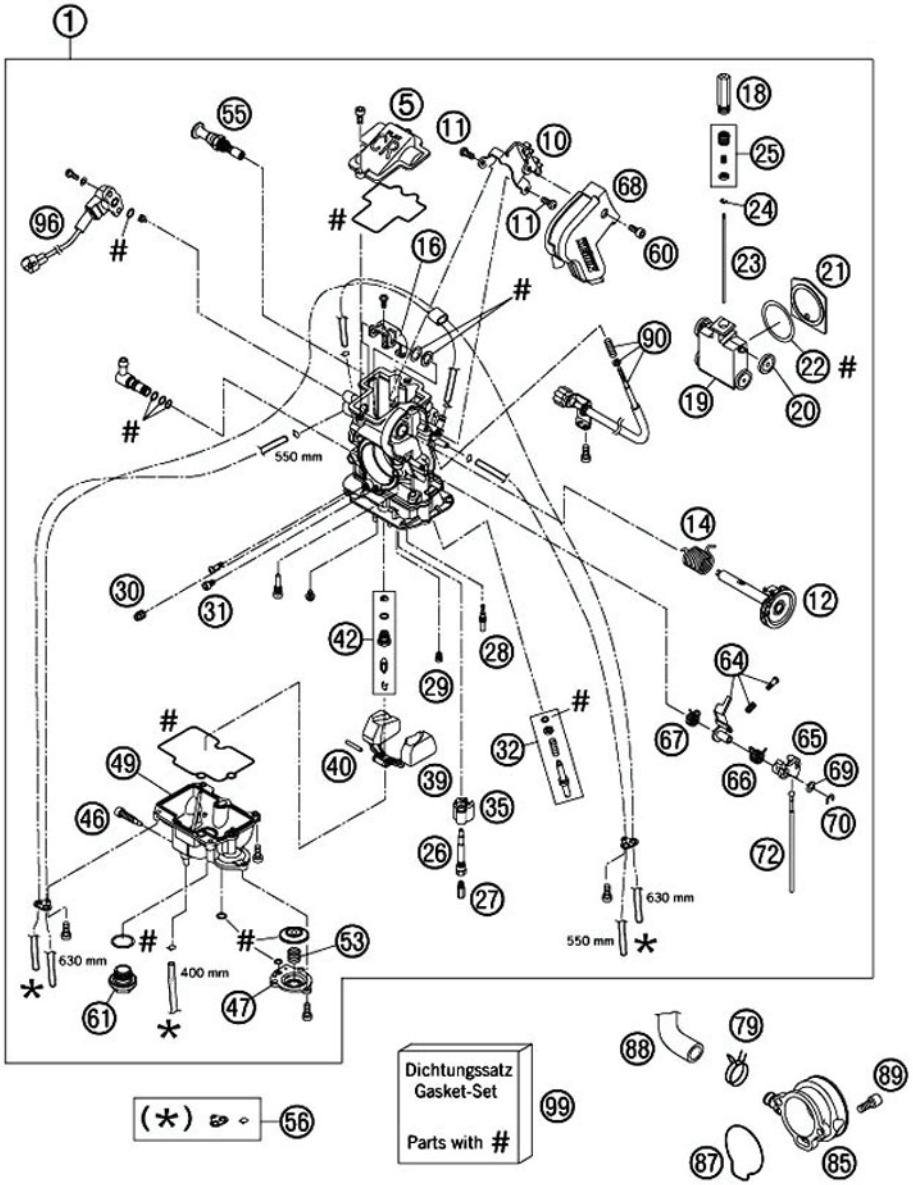

VERS.2007-'08-'09 ►PAG. 25
Pos. 42,85,87,96

TAV.13

Pos Loc Pos Ps Pos	Numero Number Numéro Nùmero Nummer	Nota Note Note Nota Anm.	Descrizione	Description	Désignation	Beschreibung	Descripciòn
66	3625160 000		Molla Connes. Leva Carburatore Keihin	Spring Link Lever	Ressort Levier Carburateur Keihin	Feder Anlenkhebel	Muelle Conexion Palanca Carburador Keihin
67	3625171 000		Molla Interm. Leva Carburatore Keihin	Spring Intermediate Lever	Ressort Levier Carburateur Keihin	Feder Verbindungshebel	Muelle Palanca Carburador Keihin
68	3625153 000		Coperchio Cablag. Carburatore Keihin	Carburetor Cover	Couvercle Cablage Carburateur Keihin	Vergaser Abdeckung	Tapa Carburador Keihin
69	3625167 000		Rondella Connetore Leva Carb. Keihin	Washer Link Lever Carburatore Keihin	Rondelle Connecteur Levier Carb. Keihin	Scheibe Anlenkhebel	Arandela Conector Palanca Carburador Keihin
70	3625165 000		Anello Seeger	E-Clip	Bague Seeger	Sicherungsscheibe E-Form	Anillo Seeger
72	3625162 000		Asta Pompa Accelleratore Carb. Keihin	Rod Accelerator Pump	Etrier Pompe Acc. Carburateur Keihin	Gestänge Beschleunigerpumpe	Asta Bomba Acelerador Carburador Keihin
79	3625195 000		Anello Stringitubo Carb. Keihin	Ydnac-Clamp 16mm	Bague Tube Carburateur Keihin	Ydnac-Klammer 10173 (16mm)	Anillo Tubo Carburador Keihin
85	2719792 000		Raccordo Carbur. Mot.250/400/450/525 Exc	Intake Funnel	Raccord Carbur. Mot. 250/400/450/525 Exc	Ansaugtrichter Fcr Seitlich Offen	Enlace Carburador Motor 250/400/450/525 Exc
87	1067364 000		Anello Or Motore 250/400/450/525 Exc	O-Ring	Bague Moteur 250/400/450/525 Exc	O-Ring Für Ansaugtrichter	Or 250/400/450/525 Exc
88	3625252 000		Tubo Sfiato Motore	Engine Breather Tube	Tube Moteur	Motorentlüftungsschlauch	Tubo Motor
89	3625064 000		Vite M5x12	Ah Screw M5x12	Vis M5x12	Isk.Schraube M5x12	Tornillo M5x12
90	3625145 000		Kit Viti Stop Carburatore Keihin	Stop Screw Cpl Fcr-Mx	Jeu Vis Stop Carburateur Keihin	Stellschraube Kpl. Fcr-Mx	Juego Tornillos Stop Carburador Keihin
96	3625255 000		Sensore Posizione Valvola A Farfalla	Throttle Position Sensor	Sensor Position Valve	Sensor Gasschieberposition	Sensor Valvula
99	3625169 000		Kit Guarnizioni Carburatore Keihin	Gasket Set Fcr-Mx	Jeu Joints Carburateur Keihin	Dichtungssatz	Juego Junta Carburador Keihin

2007/2008/2009 Versione/Version 400 cc

POS.	COD.BETA	DESCRIZIONE	DESCRIPTION
42	3625478 000	Valvola spillo	float needle
	3625479 000	Fascetta	Clamp
85	3625480 000	Tappo m10x1	Plug m10x1
	3625481 000	Guarnizione	Copper gasket
87	3625482 000	Connettore	Hose connector
96	3625483 000	Sensore posizione valvola	tps sensor fcr mx 190mm

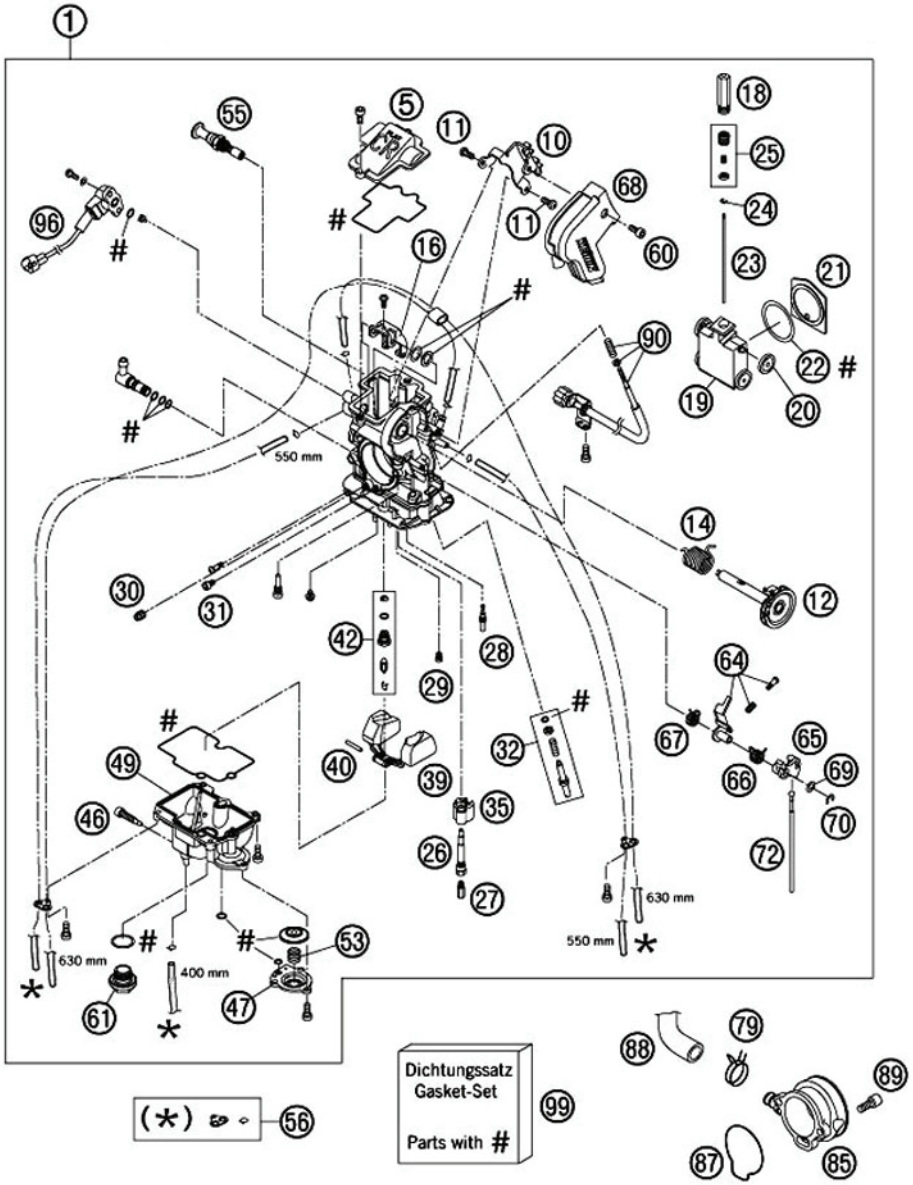

SISTEMA DI IGNEZIONE 4K3B
IGNITION SYSTEM 4K3B
INSTALLATION ELECTRIQUE 4K3B
ZÜNDANLAGE 4K3B
INSTALLACION ELECTRICA 4K3B

250-400-450-525CC / 2005-2006

TAV.14

Pos Loc Pos Ps Pos	Numero Number Numéro Nùmero Nummer	Nota Note Note Nota Anm.	Descrizione	Description	Désignation	Beschreibung	Descripciòn
1	3625213 000		Coperchio Volano	Ignition Cover Beta	Couvercle Volant	Zündungsdeckel Pulverbeschichtet	Tapa Volante Magnetico
2	3625229 000		Guarnizione Coperchio Volano	Ignition Cover Gasket 0,8mm	Joint Couvercle Volant	Zündungsdeckeldichtung 0,8mm	Junta Tapa Volante
3	3625364 000		Statore Volano 4k3b	Stator Cpl.	Stator Volant 4k3b	Stator Kpl	Stator Volante Magnetico 4k3b
4	3625365 000		Rotore Volano 4k3b	Flywheel Cpl. 4k3b	Rotor Volant 4k3b	Rotor	Rotor Volante Magnetico 4k3b
5	3625362 000		Generatore Rotativo Di Impulsi Kokusan	Plser Coil Kokusan 4k3-A/B	Stator Kokusan	Impulsgeber Kpkusan	Stator Kokusan
6	1241847 800		Centralina Cdi Motore 250 Exc	Cdi Unit 250cc	Cdi Moteur 250 Exc	Digitalbox 250cc	Cdi Motor 250exc
6	1241848 800		Centralina Cdi Motore 450 Exc	Cdi Unit 450cc	Cdi Moteur 450 Exc	Digitalbox 450cc	Cdi Motor 450 Exc
6	1241849 800		Centralina Cdi Motore 400/525 Exc	Cdi Unit 400/525cc	Cdi Moteur 400/525 Exc	Digitalbox 400/525cc	Cdi Motor 400/525 Exc
8	2713553 000		Raccordo Candela 250/400/450/525 Exc	Spark Plug Cap	Raccord Bougie 250/400/450/525 Exc	Zündkerzenstecker Vd05eg	Enlace Bujia 250/400/450/525 Exc
9	3625363 000		Candela Ngk Dcpr8e	Spark Plug Ngk Dcpr8e	Bougie Ngk Dcpr8e	Zündkerze Ngk Dcpr8e	Bujia Ngk Dcpr8e
10	3625214 000		Supporto Filo	Support For Wire	Support Fils	Halteblech Für Kabel	Soporte Fil
11	3625014 000		Bullone M4 X 6	Screw M4 X 6	Boulon M4x6	Zyl.Schraube M4x6	Tornillo M4x6
12	3625377 000		Impianto Elettrico Cdi	Wiring Harness For Cdi	Systeme Electrique Cdi	Kabelstrang F. Cdi-Box	Sistema Electrico Cdi
16	1120694 800		Bobina Motore 250/400/450/525 Exc	Ingnition Coil	Bobine Moteur 250/400/450/525 Exc	Zündspule Kokusan	Bobina Motor 250/400/450/525 Exc
20	3625085 000		Fascetta 100/2,5mm	Cable Tie 100/2,5mm	Collier 100/2,5mm	Kabelband 100/2,5mm Schwarz	Brida 100/2,5mm
29	3625087 000		Grano Di Riferimento 9,8 X 7 X 10	Dowel 9,8 X 7 X 10	Grain 9,8x7x10	Passhülse 9,8 X 7 X 10	Grano 9,8x7x10
30	3625009 000		Bullone 6.35 Rs Ch 8	Bolt 6.35	Boulon 6.35 Rs Ch 8	Sk.Bundschraube M6x35 Sw=8	Tornillo 6.35 Rs Ch 8
31	1150300 000		Bullone 6.30 Rs Ch 8	Bolt 6.30	Boulon 6.30 Rs Ch 8	Sk.Bundschraube M6x30 Sw=8	Tornillo 6.30 Rs Ch 8
32	1149070 000		Bullone 6.20 Rs Ch 8	Bolt 6.20	Boulon 6.20 Rs Ch 8	Sk.Bundschraube M6x20 Sw=8	Tornillo 6.20 Rs Ch 8
34	3625005 000		Bullone 5.16 Rs Ch 8	Bolt 5.16	Boulon 5.16 Rs Ch 8	Sk.Bundschraube M5x16 Sw=8	Tornillo 5.16 Rs Ch 8
35	3625003 000		Bullone M6 X 10	Hh Collar Screw M6x10	Boulon M6x10	Sk.Bundschraube M6x10 Sw=8	Tornillo M6x10
36	1148025 000		Bullone 6.16 Rs Ch 8	Bolt 6.16	Boulon 6.16 Rs Ch 8	Sk.Bundschraube M6x16 Sw=8	Tornillo 6.16 Rs Ch 8

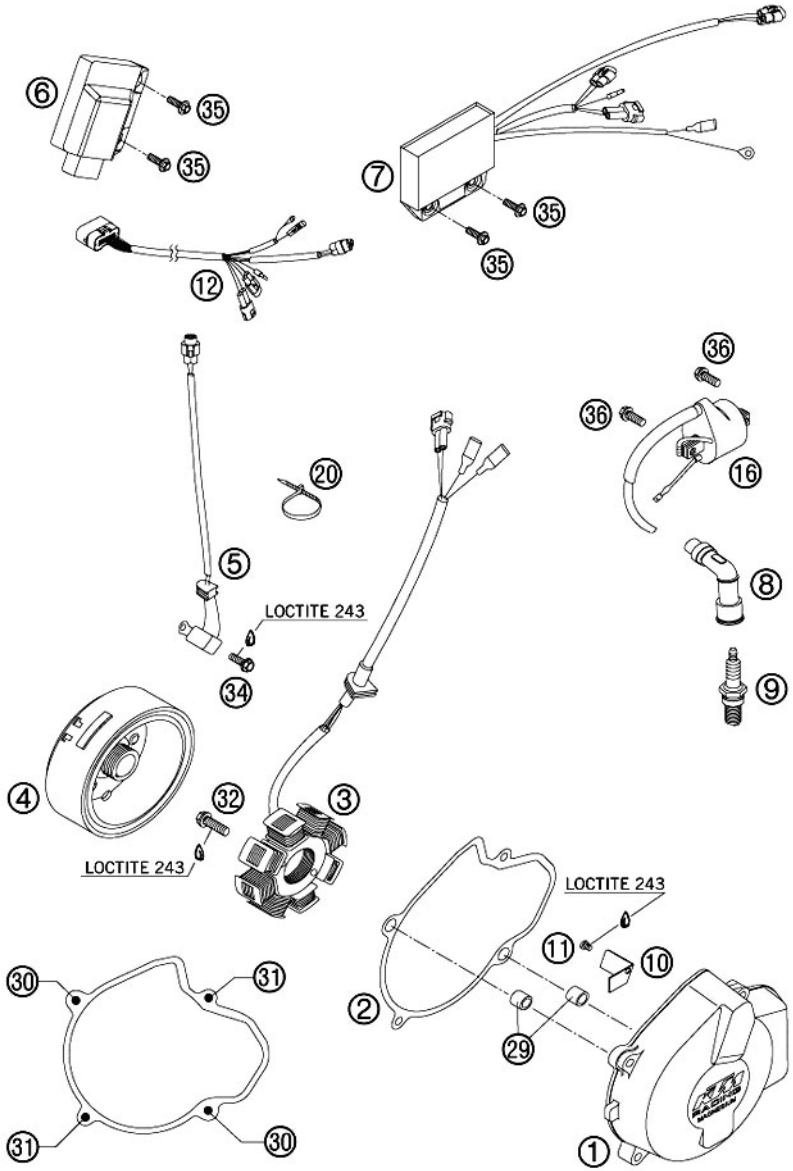

VERS.2007-'08-'09
▶PAG. Pos. 8

TAV.15

Pos Loc Pos Ps Pos	Numero Number Numéro Nùmero Nummer	Nota Note Note Nota Anm.	Descrizione	Description	Désignation	Beschreibung	Descripciòn
1	3625366 000		Motorino Avviamento	E-Starter Engine	Demarreur	E-Starter Motor Kpl. 0,45kw	Motor Arranque
2	3625368 000		Ingranaggio Intermedio Mot.Avviamneto	Intermediate Gear 58-T	Engranage Demarrage	Zwischenzahnrad 58-Z	Engranaje
3	3625123 000		Rondella Ferma Ingr. Mot. Avv. 17,2x25x1	Stop Disk 17,2x25x1	Rondelle Arret Engr. Demarrage 17,2x25x1	Anlaufscheibe 17,2x25x1	Arandela Engranaje Arranque 17,2x25x1
4	3625031 000		Anello 17 X 1	Circlip 17 X 1	Bague 17x1	Sicherungsring 17x1	Anillo 17x1
5	3625461 000	2006	Ingranaggio Riduzione	Reduction Gear	Pignon Réduction	Untersetzungszahnrad	Engranaje Reducción
8	3625024 000		Gabbia Ingranaggio Mot. Avviamento	Needle Bearing K 10x13x16 Tn	Cage Engranage Demarrage	Nadelkranz K10x13x16	Jaula Engranaje Arranque
9	3625370 000		Spinotto Gabbia Motorino Avviamento	Bearing Bolt	Goujon Cage Demarrage	Lagerbolzen	Pasador Jaula Motor De Arranque
10	3625369 000		Mozzo Ruota Libera	Free Wheel Hub	Moyeu Roue Libre	Freilaufnabe	Eje Rueda Libera
11	3625066 000		Vite M6x10	Screw M6x10	Vis M6x10	Isk.Schraube M6x10 10.9	Tornillo M6x10
12	3625251 000		Gabbia Hk 3016 B	Needle Bearing Hk 3016 B	Cage Hk 3016 B	Nadelhülse Hk 3016 B	Jaula Hk 3016 B
13	3625197 000		Ruota Libera Fwd	Free-Wheel Fwd	Roue Libre Fwd	Freilauf Fwd 332008 Bls	Rueba Libera Fwd
14	3625367 000		Ruota Libera Con Ingranaggio Riduzione	Free Whell With Recuct G.75-48/15-Z	Roue Libre Avec Engranage Reduction	Freilauf+Doppelzahn.75-48/15-Z	Rueda Con Engranaje
14	3625463 000	2006	Ruota Libera	Freewheel	Roue Libre	Freilauf	Rueda Libre
15	1149070 000		Bullone 6.20 Rs Ch 8	Bolt 6.20	Boulon 6.20 Rs Ch 8	Sk.Bundschraube M6x20 Sw=8	Tornillo 6.20 Rs Ch 8
16	3625056 000		Anello Or 25,00x3,00 Nbr 70	O Ring 25,00x3,00 Nbr70	Or 25,00x3,00 Nbr 70	O-Ring 25,00x3,00	Or 25,00x3,00 Nbr 70
17	3625371 000		Tappo	Cap Cover	Bouchon	Verschlussdeckel	Tapa
18	1147015 000		Bullone 6.12 Rs Ch 8	Bolt 6.12	Boulon 6.12 Rs Cle' 8	Sk.Bundschraube M6x12 Sw=8	Tornillo 6.12 Rs Ch 8
19	3625016 000		Rondella 6,4	Washer 6,4	Rondelle 6,4	Unterlegscheibe Din 125 A 6,4	Arandela 6,4

2007/2008/2009 Versione/Version 400 cc

POS.	COD.BETA	DESCRIZIONE	DESCRIPTION
8	3625484 000	Gabbia ingranaggio motore	Needle bearing

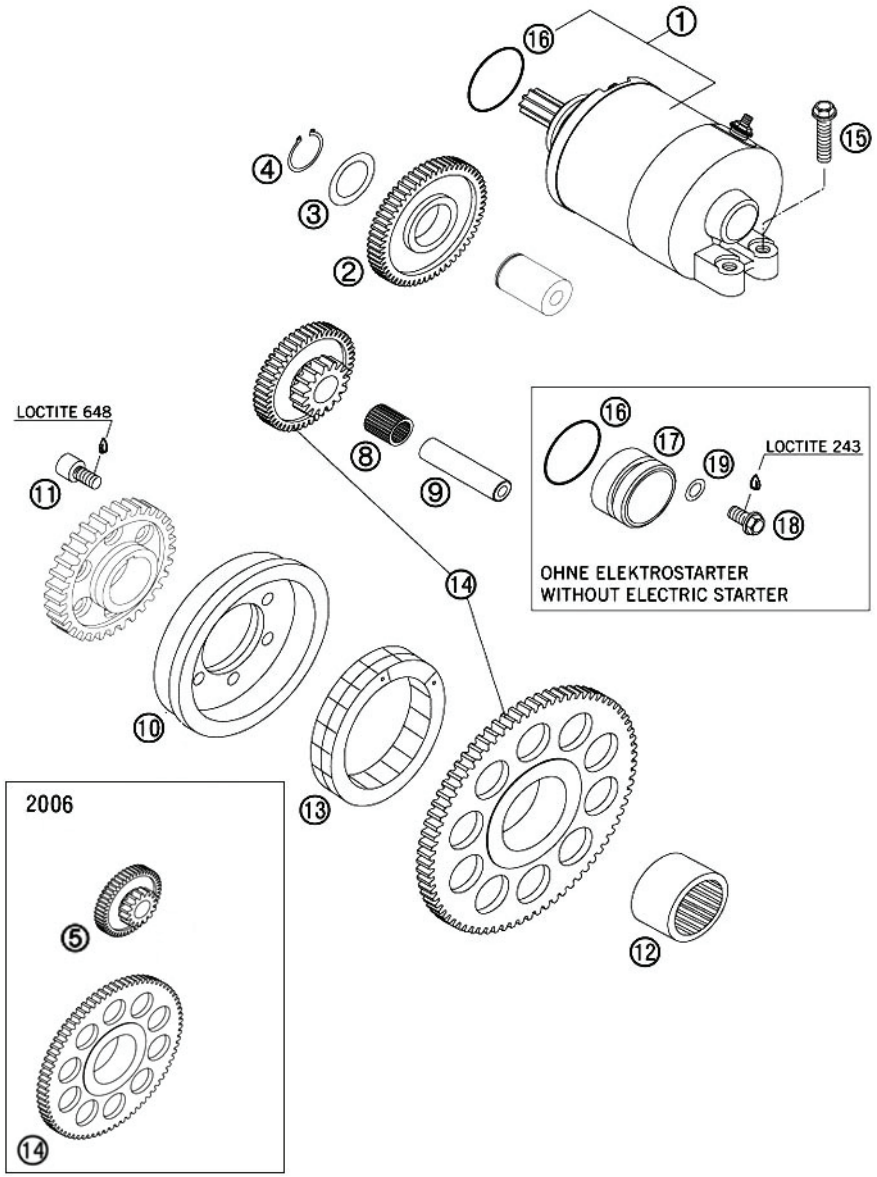

FRIZIONE
CLUTCH
EMBRAYAGE
KUPPLUNG
EMBRAGUE

250-400-450-525CC / 2005
250CC / 2006

TAV.16

Pos Loc Pos Ps Pos	Numero Number Numéro Nùmero Nummer	Nota Note Note Nota Anm.	Descrizione	Description	Désignation	Beschreibung	Descripciòn
1	3625258 000		Frizione Esterna	Outer Clutch	Embrayage Exterieure	Kupplungskorb 76-Z/20-Z Einsatz Gehärtet	Embrague Exterior
2	3625259 000		Mozzo Interno Frizione	Inner Clutch Hub	Moyeu Interieur Embrayage	Mitnehmer	Buje Interior Embrague
3	3625267 000		Disco Frizione 2mm	Lining Disc 2mm	Disque Embrayage 2mm	Belaglamelle 2mm	Disque Embrague 2mm
4	3625266 000		Disco Frizione Intermedio 1mm	Intermediate Disc 1mm	Disque Embrayage 1mm	Zwischenlamelle 1mm	Disque Embrague 1mm
5	3625260 000		Coperchio A Pres.Frizione Con Pas. Olio	Pressure Cap W. Oil Passage	Couvercle Embrayage	Druckkappe M.Ölbohrungen	Tapa Embrague
5	3625452 000	2006	Coperchio A Pres.Frizione Con Pas. Olio	Pressure Cap W. Oil Passage	Couvercle Embrayage	Druckkappe M.Ölbohrungen	Tapa Embrague
6	3625262 000		Molla Frizione 2,5x43mm	Clutch Spring 2,5x43mm	Ressort Embrayage 2,5x43mm	Kupplungsfeder 2,5x43mm	Muelle Embrague 2,5x43mm
7	3625263 000		Reggimolla Frizione 6,2x12x18x3,6mm	Spring Retainer 6,2x12x18x3,6mm	Porte-Ressort Embrayage 6,2x12x18x3,6 Mm	Federteller 6,2x12x18x3,6	Muelle Embrague 6,2x12x18x3,6 Mm
10	3625269 000		Asta Spingidisco Frizione 7x188mm	Push Rod 7x188mm	Etrier Disque Embrayage 7x188mm	Druckstnge 7x189,6mm	Asta Disque Embrague 7x189,6mm
11	3625264 000		Rondella (Mezza)	Push Rod 7x188mm	Rondelle	Halbscheibe	Arandela
12	3625268 000		Rondella Di Supporto 25x35x1	Supportwasher 25x35x1	Rondelle 25x35x1	Stützscheibe 25x35x1	Arandela Soporte 25x35x1
13	3625073 000		Vite M6 X 25	Ah Screw M6 X 25	Vis M6x25	Isk.Schraube M6x25	Tornillo M6x25
14	3625029 000		Gabbia A Rulli 25x29x10	Needle Bear K 25x29x10	Cage 25x29x10	Nadelkranz K25x29x10	Jaula 25x29x10
15	3625257 000		Ingranaggio Primario 33 T	Primary Gear 33 T	Engranage Primaire 33t	Primärrad 33-Z	Engranaje Primario 33t
16	1291895 033		Corpo Pompa Con Pistone Ø27	Output Cylinder Cpl.	Corps Pompe Avec Pist.Ø27	Nehmerzylinder Kpl.	Protector Bomba Con Piston Ø27
17	3625058 000		Anello Or 30,00x1,50 Nbr 70	O-Ring 30,00x1,50 Nbr 70	Or 30,00x1,50 Nbr 70	O-Ring 30,00x1,50	Or 30,00x1,50 Nbr 70
18	3625090 000		Siringa Per Olio Spurgo Frizione	Vent Injektion Hydr. Clutch	Seringat Huile Embrayage	Entlüft.Spritze Hydr. Kupplung	Jeringa Aceite Embrague
19	3625272 000		Pistone Con Anello Or Corpo Pompa Friz.	Piston With O-Ring And Ball	Piston Avec Or Pompe Embrayage	Kolben Mit O-Ring Und Kugel	Piston Con Or Cuerpo Bomba Embrague
20	3183530 000		Vite Spec. Pompa Idraulica Magura	Magura Hydraulic Pump Special Screw	Vis Speciales Pompe Hydraulique Magura	Entüftungschr. Mit Kappe	Tornillo Espec. Bomba Idraulica Magura
21	3625009 000		Bullone 6.35 Rs Ch 8	Bolt 6.35	Boulon 6.35 Rs Ch 8	Sk.Bundschraube M6x35 Sw=8	Tornillo 6.35 Rs Ch 8
22	1149070 000		Bullone 6.20 Rs Ch 8	Bolt 6.20	Boulon 6.20 Rs Ch 8	Sk.Bundschraube M6x20 Sw=8	Tornillo 6.20 Rs Ch 8
23	3625265 000		Rondella Speciale Con Gradino	Stepped Washer	Rondelle Speciale	Stufenscheibe	Arandela Especial
24	3625271 000		Guarnizione Per Corpo Frizione	Gasket For Slave Cylinder	Joint Corp Embrayage	Dichtung Für Nehmerzylinder	Junta Cuerpo Embrague
26	3625261 000		Perno Guida Frizione	Driving Sleeve D=8, L=31	Pivot Guide Embrayage	Mitnahmehülse D=8,L=31	Eje Guia Embrague
26	3625465 000	2006	Perno Guida Frizione D=8,L=33	Driving Sleeve D=8, L=33	Pivot Guide Embrayage D=8,L=33	Mitnahmehülse D=8,L=33	Eje Guia Embrague D=8,L=33

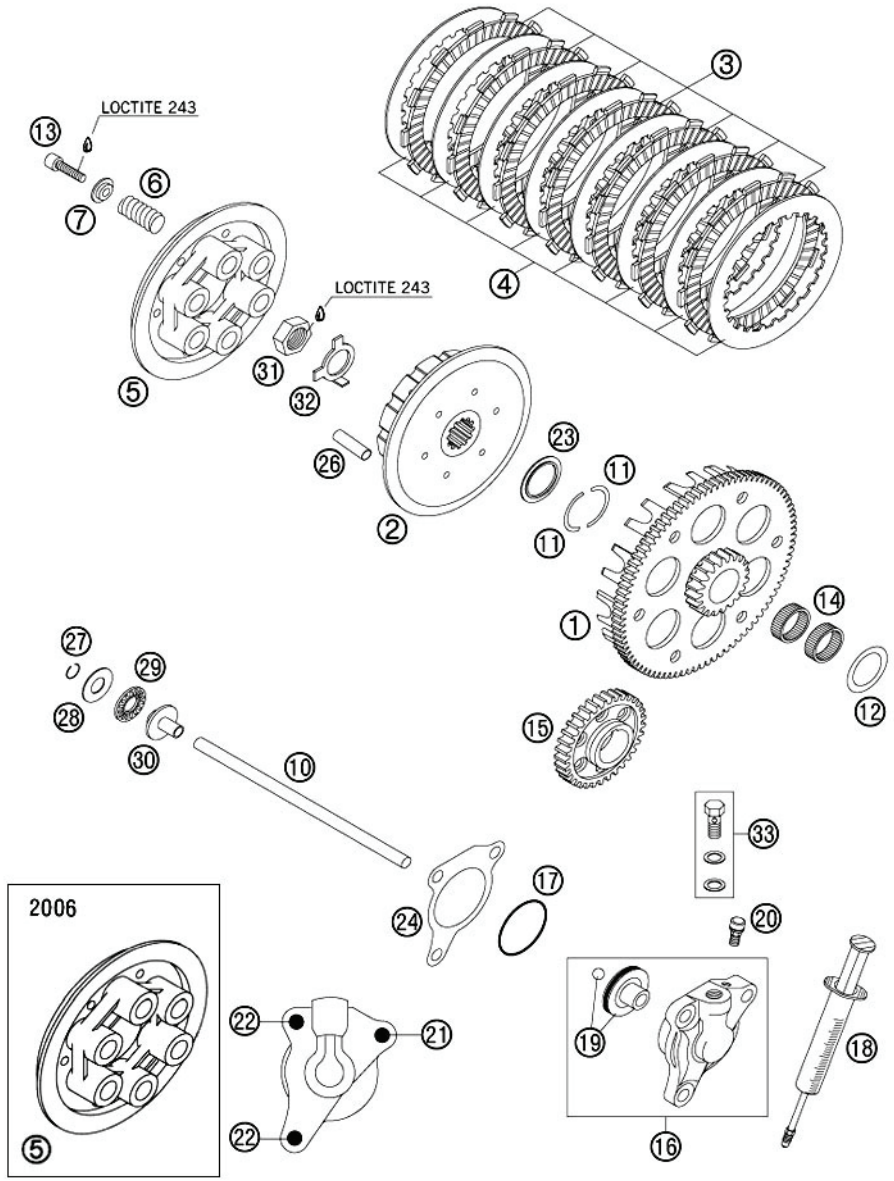

TAV.16

Pos Loc Pos Ps Pos	Numero Number Numéro Nùmero Nummer	Nota Note Note Nota Anm.	Descrizione	Description	Désignation	Beschreibung	Descripciòn
27	3625079 000		Anello Rw12	Circlip Rw12	Bague Rw12	Sprengring Rw12	Anillo Rw12
28	3625131 000		Rondella 12x26x1	Axial Washer 12x26x1	Rondelle 12x26x1	Axialscheibe As1226 12x26x1	Arandela 12x26x1
29	3625130 000		Cuscinetto Asta Corpo Frizione	Axial Needle Bearing	Roulement Etrier Embrayage	Axiallager Axk 1226	Cojinete
30	3625092 000		Innesto Asta Corpo Frizione	Pressure Piece	Embrayage Etrier	Druckpilz 125-380	Embrague Asta Cuerpo Embrague
31	3625069 000		Dado M18 X 1,5	Hexagon Nut M18x1,5	Ecrou M18x1,5	Sk.Mutter M18x1,5	Dado M18x1,5
32	3625137 000		Rondella Di Bloccaggio Dado	Lock Washer	Rondelle Blocage Ecrou	Scherungsblech	Arandela Dado
33	3625270 000		Bullone Forato Corpo Frizione	Hollow Screw Hydr. Clutch Cpl.	Boulon Corp Embrayage	Hohlschraube Hydr.Kuppl.Kpl.	Tornillo Cuerpo Embrague

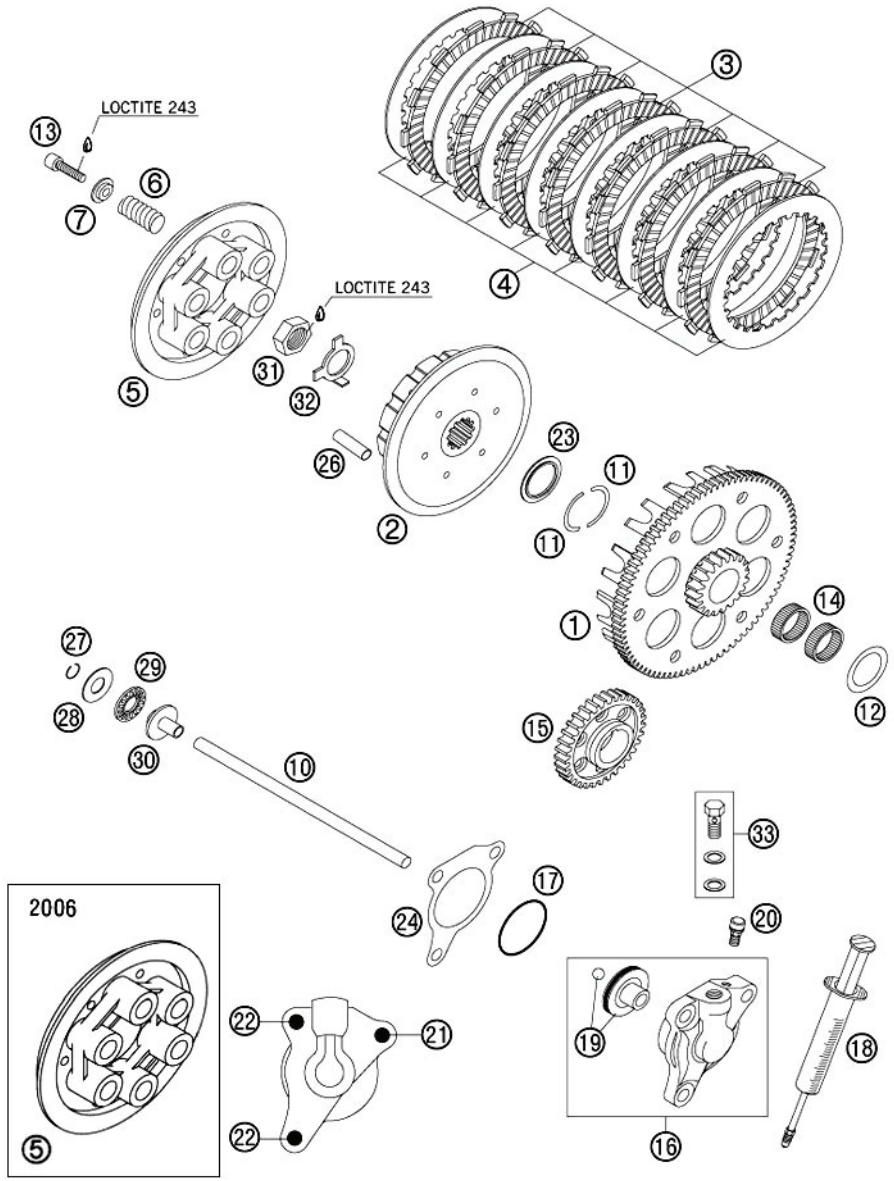

VERS.2007-'08-'09
►PAG.31 Pos. 2,5

TAV.16A

Pos Loc Pos Ps Pos	Numero Number Numéro Nùmero Nummer	Nota Note Note Nota Anm.	Descrizione	Description	Désignation	Beschreibung	Descripciòn
1	3625258 000		Frizione Esterna	Outer Clutch	Embrayage Exterieure	Kupplungskorb 76-Z/20-Z Einsatz Gehärtet	Embrague Exterior
1	3625464 000	2006	Frizione Esterna	Outer Clutch	Embrayage Exterieure	Kupplungskorb 76-Z/20-Z Einsatz Gehärtet	Embrague Exterior
2	3625259 000		Mozzo Interno Frizione	Inner Clutch Hub	Moyeu Interieur Embrayage	Mitnehmer	Buje Interior Embrague
2	3625451 000	2006	Mozzo Interno Frizione	Inner Clutch Hub	Moyeu Interieur Embrayage	Mitnehmer	Buje Interior Embrague
3	3625267 000		Disco Frizione 2mm	Lining Disc 2mm	Disque Embrayage 2mm	Belaglamelle 2mm	Disque Embrague 2mm
4	3625266 000		Disco Frizione Intermedio 1mm	Intermediate Disc 1mm	Disque Embrayage 1mm	Zwischenlamelle 1mm	Disque Embrague 1mm
5	3625260 000		Coperchio A Pres.Frizione Con Pas. Olio	Pressure Cap W. Oil Passage	Couvercle Embrayage	Druckkappe M.Ölbohrungen	Tapa Embrague
5	3625452 000	2006	Coperchio A Pres.Frizione Con Pas. Olio	Pressure Cap W. Oil Passage	Couvercle Embrayage	Druckkappe M.Ölbohrungen	Tapa Embrague
6	3625262 000		Molla Frizione 2,5x43mm	Clutch Spring 2,5x43mm	Ressort Embrayage 2,5x43mm	Kupplungsfeder 2,5x43mm	Muelle Embrague 2,5x43mm
7	3625263 000		Reggimolla Frizione 6,2x12x18x3,6mm	Spring Retainer 6,2x12x18x3,6mm	Porte-Ressort Embrayage 6,2x12x18x3,6 Mm	Federteller 6,2x12x18x3,6	Muelle Embrague 6,2x12x18x3,6 Mm
7	3625453 000	2006	Reggimolla Frizione 6,2x12x18x5,2mm	Spring Retainer 6,2x12x18x5,2mm	Porte-Ressort Embrayage 6,2x12x18x5,2 Mm	Federteller 6,2x12x18x5,2	Muelle Embrague 6,2x12x18x5,2 Mm
8	3625454 000	2006	Disco Intermedio 1,4mm	Intermediate Plate 1.4mm	Disque Intermédiaire 1,4mm	Mittlere Scheibe 1,4mm	Disco Intermedio 1,4mm
10	3625269 000		Asta Spingidisco Frizione 7x188mm	Push Rod 7x188mm	Etrier Disque Embrayage 7x188mm	Druckstnge 7x189,6mm	Asta Disque Embrague 7x189,6mm
10	3625455 000	2006	Asta Spingidisco Frizione 7x189,6mm	Push Rod 7x189,6mm	Etrier Disque Embrayage 7x189,6mm	Druckstnge 7x188mm	Asta Disque Embrague 7x188mm
11	3625264 000		Rondella (Mezza)	Push Rod 7x188mm	Rondelle	Halbscheibe	Arandela
12	3625268 000		Rondella Di Supporto 25x35x1	Supportwasher 25x35x1	Rondelle 25x35x1	Stützscheibe 25x35x1	Arandela Soporte 25x35x1
13	3625073 000		Vite M6 X 25	Ah Screw M6 X 25	Vis M6x25	Isk.Schraube M6x25	Tornillo M6x25
14	3625029 000		Gabbia A Rulli 25x29x10	Needle Bear K 25x29x10	Cage 25x29x10	Nadelkranz K25x29x10	Jaula 25x29x10
15	3625257 000		Ingranaggio Primario 33 T	Primary Gear 33 T	Engranage Primaire 33t	Primärrad 33-Z	Engranaje Primario 33t
16	1291895 033		Corpo Pompa Con Pistone Ø27	Output Cylinder Cpl.	Corps Pompe Avec Pist.Ø27	Nehmerzylinder Kpl.	Protector Bomba Con Piston Ø27
17	3625058 000		Anello Or 30,00x1,50 Nbr 70	O-Ring 30,00x1,50 Nbr 70	Or 30,00x1,50 Nbr 70	O-Ring 30,00x1,50	Or 30,00x1,50 Nbr 70
18	3625090 000		Siringa Per Olio Spurgo Frizione	Vent Injektion Hydr. Clutch	Seringat Huile Embrayage	Entlüft.Spritze Hydr. Kup-plung	Jeringa Aceite Embrague
19	3625272 000		Pistone Con Anello Or Corpo Pompa Friz.	Piston With O-Ring And Ball	Piston Avec Or Pompe Embrayage	Kolben Mit O-Ring Und Kugel	Piston Con Or Cuerpo Bomba Embrague
20	3183530 000		Vite Spec. Pompa Idraulica Magura	Magura Hydraulic Pump Special Screw	Vis Speciales Pompe Hydraulique Magura	Entüftungschr. Mit Kappe	Tornillo Espec. Bomba Idrau-lica Magura
21	3625009 000		Bullone 6.35 Rs Ch 8	Bolt 6.35	Boulon 6.35 Rs Ch 8	Sk.Bundschraube M6x35 Sw=8	Tornillo 6.35 Rs Ch 8

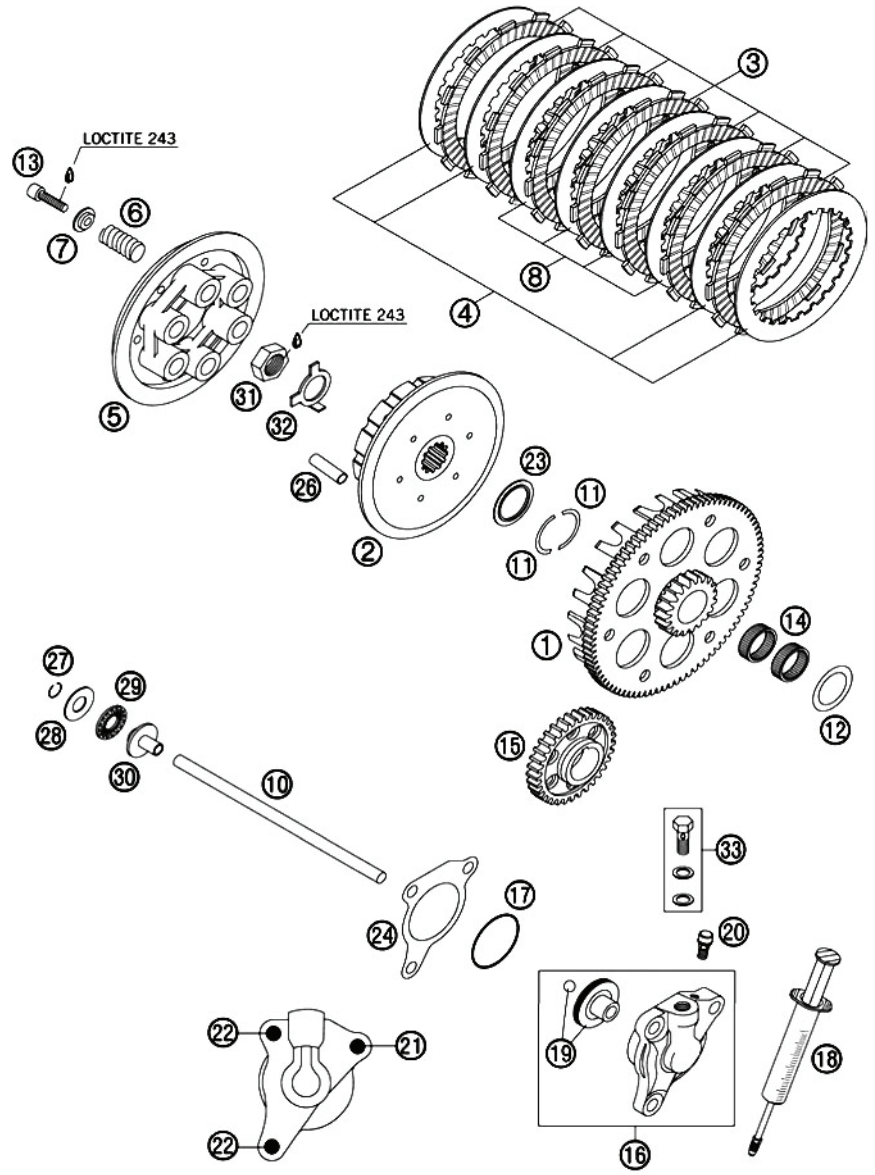

TAV.16A

Pos Loc Pos Ps Pos	Numero Number Numéro Nùmero Nummer	Nota Note Note Nota Anm.	Descrizione	Description	Désignation	Beschreibung	Descripciòn
22	1149070 000		Bullone 6.20 Rs Ch 8	Bolt 6.20	Boulon 6.20 Rs Ch 8	Sk.Bundschraube M6x20 Sw=8	Tornillo 6.20 Rs Ch 8
23	3625265 000		Rondella Speciale Con Gradino	Stepped Washer	Rondelle Speciale	Stufenscheibe	Arandela Especial
24	3625271 000		Guarnizione Per Corpo Frizione	Gasket For Slave Cylinder	Joint Corp Embrayage	Dichtung Für Nehmerzylin-der	Junta Cuerpo Embrague
26	3625261 000		Perno Guida Frizione	Driving Sleeve D=8, L=31	Pivot Guide Embrayage	Mitnahmehülse D=8,L=31	Eje Guia Embrague
26	3625465 000	2006	Perno Guida Frizione D=8,L=33	Driving Sleeve D=8, L=33	Pivot Guide Embrayage D=8,L=33	Mitnahmehülse D=8,L=33	Eje Guia Embrague D=8,L=33
27	3625079 000		Anello Rw12	Circlip Rw12	Bague Rw12	Sprengring Rw12	Anillo Rw12
28	3625131 000		Rondella 12x26x1	Axial Washer 12x26x1	Rondelle 12x26x1	Axialscheibe As1226 12x26x1	Arandela 12x26x1
29	3625130 000		Cuscinetto Asta Corpo Frizione	Axial Needle Bearing	Roulement Etrier Embrayage	Axiallager Axk 1226	Cojinete
30	3625092 000		Innesto Asta Corpo Frizione	Pressure Piece	Embrayage Etrier	Druckpilz 125-380	Embrague Asta Cuerpo Embrague
31	3625069 000		Dado M18 X 1,5	Hexagon Nut M18x1,5	Ecrou M18x1,5	Sk.Mutter M18x1,5	Dado M18x1,5
32	3625137 000		Rondella Di Bloccaggio Dado	Lock Washer	Rondelle Blocage Ecrou	Scherungsblech	Arandela Dado
33	3625270 000		Bullone Forato Corpo Frizione	Hollow Screw Hydr. Clutch Cpl.	Boulon Corp Embrayage	Hohlschraube Hydr.Kuppl.Kpl.	Tornillo Cuerpo Embrague

2007/2008/2009 Versione/Version 400 - 450 - 525 cc

POS.	COD.BETA	DESCRIZIONE	DESCRIPTION
2	3625485 000	Mozzo interno frizione	Inner Hub
5	3625486 000	Coperchio a pres. frizione	Pressure cap with oil bore

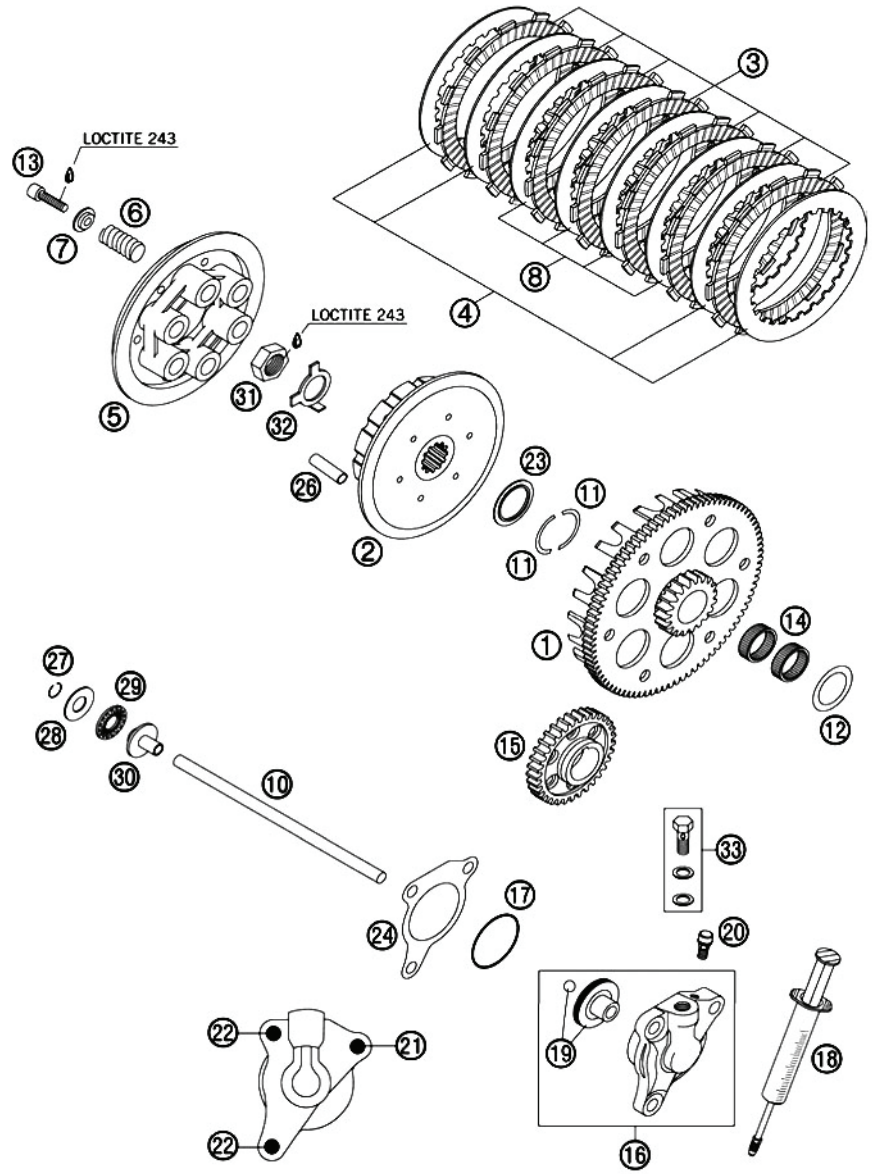

VERS.2007-'08-'09
►PAG.32 Pos.1

TAV.17

Pos Loc Pos Ps Pos	Numero Number Numéro Nùmero Nummer	Nota Note Note Nota Anm.	Descrizione	Description	Désignation	Beschreibung	Descripciòn
1	2155620 000		Leva Messa In Moto 250/ 400/450/525 Exc	Kickstarter Lever	Levier Demarrage 250/ 400/450/525 Exc	Kickstarter Kpl	Palanca Arranque 250/ 400/450/525 Exc
2	1170014 000		Bullone Spec. Leva Mm Rr 4t	Special Bolt, Rr 4t	Boulon Spec. Levier Demarrage Rr4t	Kettenradschr. M8x20 Isk Sw=6	Tornillo Espec. Palanca Arranque Rr 4t
3	2774788 000		Rondella Speciale Fis.Gio Leva Mm Rr4t	Washer	Rondelle Spec. Fixage Levier Dem. Rr4t	Fasonscheibe 8mm Verzinkt	Arandela Espec. Fijacion Palanca Arranque Rr4t
4	3625045 000		Anello Paraolio 19x30x7	Shaft Seal Ring 19x30x7	Joint Spy 19x30x7	Wellendichtring 19x30x7	Junta Aceite 19x30x7
5	3625293 000		Mozzo Guida Messa In Moto	Driving Hub	Moyeu Guide Demarrage	Mitnehmernabe	Buje Gujia Arranque
6	3625289 000		Ingranaggio Messa In Moto	Kickstarter Gear 39-T	Engranage Demarrage	Starterrad 39-Z	Engranaje Arranque
7	3625031 000		Anello 17 X 1	Circlip 17 X 1	Bague 17x1	Sicherungsring 17x1	Anillo 17x1
9	3625078 000		Rondella 17x24x0,5	Shim Washer 17x24x0,5	Rondelle 17x24x0,5	Passcheibe 17x24x0,5	Arandela 17x24x0,5
10	3625291 000		Ingranaggio Intermedio Messa In Moto Z24	Intermediate Gear 24-T	Engranage Demarrage Z24	Starterzwischenrad 24-Z	Engranaje Arranque Z24
12	3625292 000		Molla Messa In Moto	Kickstarter Spring	Ressort Demarrage	Kickstartfeder	Nuelle Arranque
13	3625295 000		Piastrina Attacco Molla Messa In Moto	Spring Hanger	Plaquette Ressort Demarrage	Federlasche	Placa Muelle Arranque
14	1147015 000		Bullone 6.12 Rs Ch 8	Bolt 6.12	Boulon 6.12 Rs Cle' 8	Sk.Bundschraube M6x12 Sw=8	Tornillo 6.12 Rs Ch 8
15	3625296 000		Rondella Spessore 20x32x1	Shim 20x32x1	Rondelle Epaisseur 20x32x1	Scheibe 20x32x1	Arandela Espesor 20x32x1
16	3625032 000		Anello 19 X 1,2	Circlip 19 X 1,2	Bague 19x1,2	Sicherungsring 19x1,2	Anillo 19x1,2
17	3625026 000		Gabbia A Rulli 22x26x10	Needle Bearing K 22x26x10	Cage 22x26x10	Nadelkranz K 22x26x10 A	Jaula 22x26x10
18	3625294 000		Battuta Messa In Moto	Bump Part	Battue Demarrage	Anschlagstück	Paliza Arranque
19	3625181 000		Rondella Di Fissaggio 22,2x30x1,5	Stop Disk 22,2x30x1,5	Rondelle Fixage 22,2x30x1,5	Anlaufscheibe 22,2 X 30 X 1,5	Arandela Fijacion 22,2x30x1,5
20	3625180 000		Molla Nottolino Arresto Ingr./Alberomm	Ratchet Gear Spring 1,2 Mm	Ressort Cliquet	Sperradfeder 1,2 Mm	Muelle Engranaje/Ciguenal Arranque
21	3625290 000		Nottolino Arresto Ingr./ Albero Mm	Kickstarter Sleeve	Douille Demarrange	Kickstarter Muffe	Manguito Arranque
23	1149070 000		Bullone 6.20 Rs Ch 8	Bolt 6.20	Boulon 6.20 Rs Ch 8	Sk.Bundschraube M6x20 Sw=8	Tornillo 6.20 Rs Ch 8
24	3625288 000		Albero Messa In Moto	Kickstarter Shaft	Arbre Demarrage	Kickstarterwelle	Arbre Arranque

2007/2008/2009 Versione/Version 400 - 450 - 525 cc

POS.	COD.BETA	DESCRIZIONE	DESCRIPTION
1	2155621 000	Leva messa in moto	Kickstarter lever

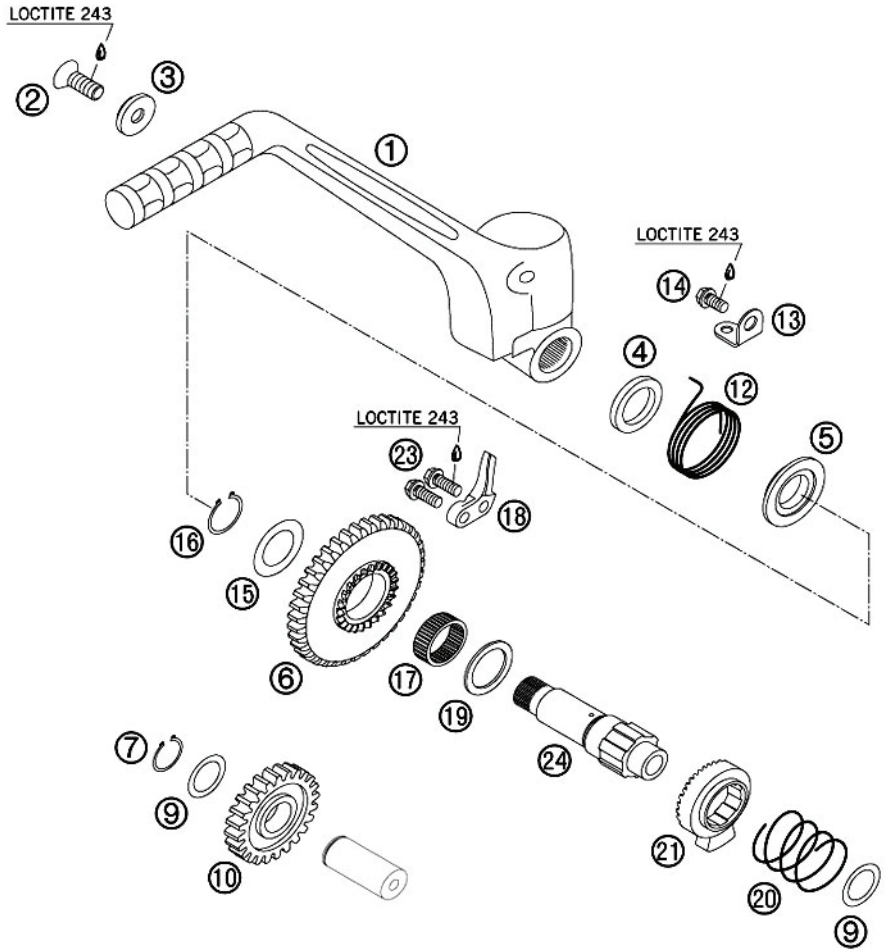

TRASMISSIONE PRIMARIA
TRANSMISSION I° - MAIN SHAFT
TRANSMISSION PRIMAIRE
GETRIEBE I° - ANTRIEBSWELLE
TRANSMISSION I°

250CC / 2005-2006

TAV.18

Pos Loc Pos Ps Pos	Numero Number Numéro Nùmero Nummer	Nota Note Note Nota Anm.	Descrizione	Description	Désignation	Beschreibung	Descripciòn
1	3625393 000		Albero Z.14 Trasmissione Promaria	Main Shaft 14-T, Primary Transmission	Arbre Z.14 Transmission Primaire	Antriebswelle 14-Z	Ciguenal Z.14 Transmision Primaria
2	3625396 000		Ingranaggio 5ø Albero Primario	Idler Gear 5.G Z.23	Engranage 5ø Arbre Primaire	Losrad 5.G 23-Z	Engranaje 5 Ciguenal Primario
3	3625093 000		Boccola Ingr. 5ø Albero Primario	Idler Gear Bush 22x25x11,1	Bague Engr. 5ø Arbre Primaire	Losradbüchse 22x25x11,1	Anillo Engranaje 5 Ciguenal Primario
4	3625096 000		Rondella Spec.Fis.Ingr.Interm.Alb.Prim.	Stop Disk 22,2x27,8x1	Rondelle Spec.Fix.Engr.Interm.Arbre Prim	Anlaufscheibe 22,2x27,8x1	Arandela Espec. Fijacion Engranaje Interm. Cig. P.
5	3625395 000		Ingranaggio 3ø/4ø Z.19/21 Su Primario	Sliding Gear 3./4.G 19/21-T	Engranage 3ø/4ø Z.19/21 Sur Primaire	Schieberad 3./4,G 19/21-Z	Engranaje 3/4 Z.19/21 Sobre Primario
6	3625089 000		Anello 22 X 1,2	Lock Ring 22x1,2	Bague 22x1,2	Sprengring 22x1,2	Anillo 22x1,2
7	3625095 000		Rondella Spec.Fis.Ingr.3ø/4ø Alb. Prim.	Stop Disk 22,2x27,8x1a	Rondelle Spec.Fix.Engr.3/4 Arbr. Prim	Anlaufscheibe 22,2x27,8x1	Arandela Espec. Fijacion Engranaje 3/4 Cig. Pri.
9	3625397 000		Ingranaggio 6ø Z.22 Su Primario	Idler Gear 6.G 22-T	Engranage 6ø Z.22 Sur Primaire	Losrad 6.Gang 22-Z	Engranaje 6 Z.22 Sobre Primario
10	3625394 000		Ingranaggio 2ø Z.16 Su Primario	Solid Gear 2.G 16-T	Engranage 2ø Z.16 Sur Primaire	Festrad 2.Gang 16-Z	Engranaje 2°Z.16 Sobre Primario
11	3625094 000		Rondella Spec.Fis.Ingr.2ø Alb. Prim.	Stop Disk 17,2x24x1	Rondelle Spec. Fix. Engr. 2ø Arbre Prim.	Anlaufscheibe 17,2x24x1	Arandela Espec. Fijacion Engranaje 2° Cig. Pri.
12	3625039 000		Cuscinetto A Sfere 6203	Ball. Bearing 6203	Roulement 6203	Rillenkugellager 6203 Jr2 C3	Cojinete 6203
13	3625040 000		Cuscinetto A Sfere 6205	Ball. Bearing 6205	Roulement	Rillenkugellager 6205 C3 Ntn	Cojinete 6205

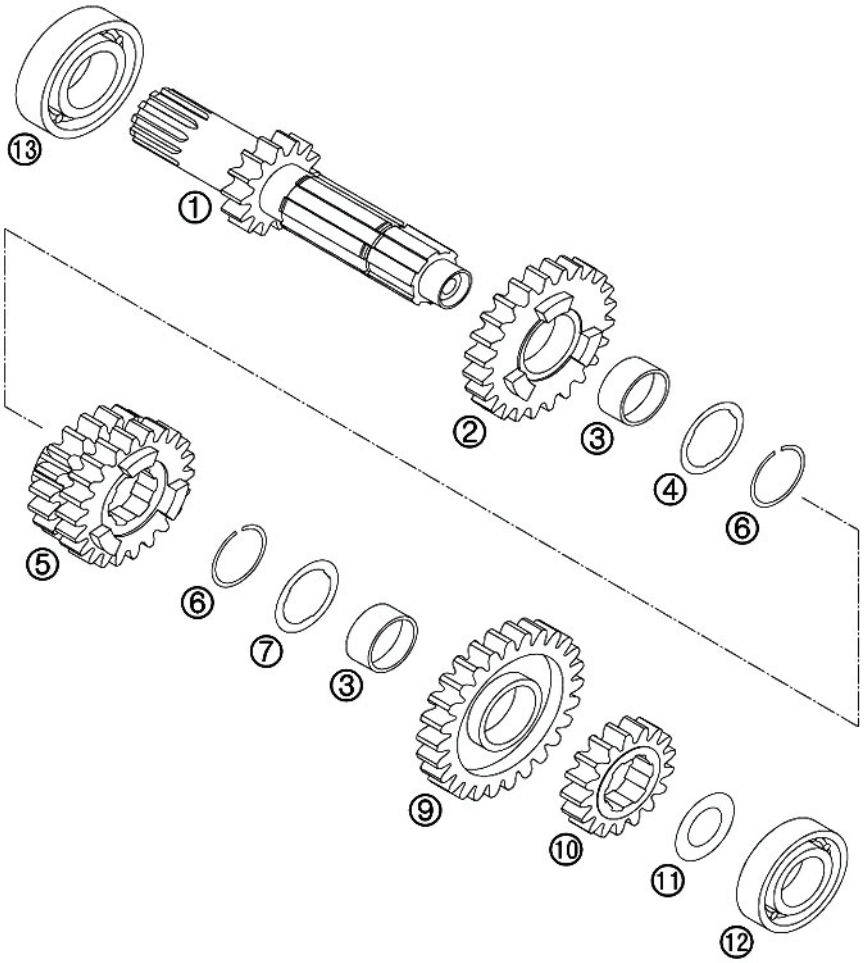

TRASMISSIONE PRIMARIA
TRANSMISSION I° - MAIN SHAFT
TRANSMISSION PRIMAIRE
GETRIEBE I° - ANTRIEBSWELLE
TRANSMISSION I°

400-450-525CC / 2005-2006

TAV.19

Pos Loc Pos Ps Pos	Numero Number Numéro Nùmero Nummer	Nota Note Note Nota Anm.	Descrizione	Description	Désignation	Beschreibung	Descripciòn
1	3625273 000		Albero Z.14 Trsm. Primaria 400/450/525	Main Shaft,Prim.Transmission 400/450/525	Arbre Z.14 Transm. Primaire 400/450/525	Antriebswelle - Zb 14-Z	Arbre Z.14 Transmission Primaria 400/450/525
2	3625276 000		Ingranaggio 5ø Z.24 400/450/525	Idler Gear 5.G 24-T	Engranage 5ø Z.24 400/450/525	Losrad 5.G 24-Z 34	Engranaje 5° Z.24 400/450/525
3	3625028 000		Boccola Ingr. 5ø Su Albero Primario	Needle Bear K 22x26x13	Bague Engranage 5ø Sur Vilebrequin	Nadelkranz K 22x26x13 Tn	Anillo
4	3625286 000		Rondella Spec. 25,2x32x1,5	Stop Disk 25,2x32x1,5	Rondelle Spec. 25,2x32x1,5	Anlaufscheibe 25,2x32x1,5	Arandela Especial 25,2x32x1,5
5	3625275 000		Ingranaggio 3ø/4ø Z.19/22 Su Primario	Sliding Gear 3./4.G 19/22-T	Engranage 3ø/4ø Z.19/22 Sur Primaire	Schieberad 3./4,G 19/22-Z 32	Engranaje 3/4 Z.19/22 Sobre Primario
6	3625033 000		Anello 25 X 1,2	Circlip 25x1,2	Bague 25x1,2	Sicherungsring 25x1,2	Anillo 25x1,2
7	3625285 000		Rondella Spec.Fis.Ingr.3ø/4ø Alb. Prim.	Stop Disk 25,2x32x1,5	Rondelle Spec. Fix. Engr. 3/4 Arbre Pr	Anlaufscheibe 25,2x32x1,5	Arandela Especial Fijacion Engranaje 3/4 Arbre
9	3625277 000		Ingranaggio 6ø Z.26 Su Primario	Idler Gear 6.G 26-T	Engranage 6ø Z.26 Sur Primaire	Losrad 6.Gg 26-Z 35	Engranaje 6° Z.26 Sobre Primario
10	3625274 000		Ingranaggio 2ø Z.17 Su Primario	Solid Gear 2.G 17-T	Engranage 2ø Z.17 Sur Primaire	Festrad 2.G 17-Z 21	Engranaje 2° Z.17 Sobre Primario
11	3625136 000		Rondella Spec. 17,2x30x1	Stop Disk 17,2x30x1	Rondelle Spec. 17,2x30x1	Anlaufscheibe 17,2x30x1	Arandela 17,2x30x1
12	3625039 000		Cuscinetto A Sfere 6203	Ball. Bearing 6203	Roulement 6203	Rillenkugellager 6203 Jr2 C3	Cojinete 6203
13	3625040 000		Cuscinetto A Sfere 6205	Ball. Bearing 6205	Roulement	Rillenkugellager 6205 C3 Ntn	Cojinete 6205

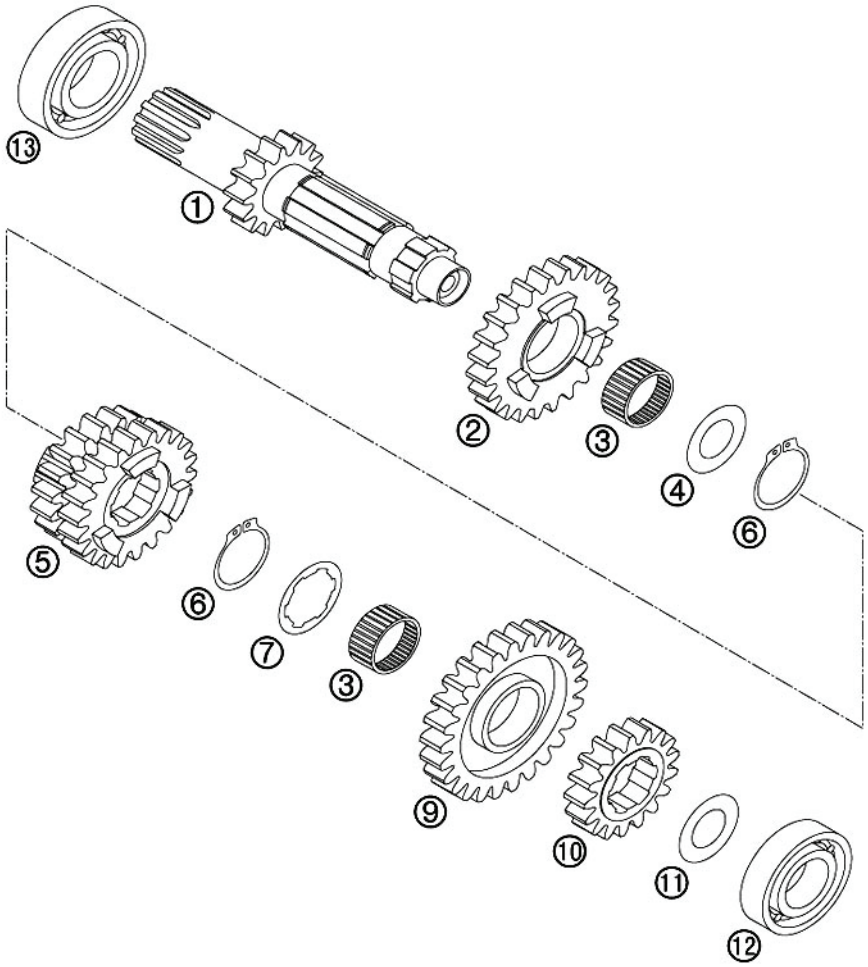

TRASMISSIONE SECONDARIA
TRANSMISSION II° - MAIN SHAFT
TRANSMISSION SECONDAIRE
GETRIEBE II° - ANTRIEBSWELLE
TRANSMISSION II°

250CC / 2005-2006

TAV.20

Pos Loc Pos Ps Pos	Numero Number Numéro Nùmero Nummer	Nota Note Note Nota Anm.	Descrizione	Description	Désignation	Beschreibung	Descripciòn
1	3625278 000		Albero Trasmissione Secondaria	Main Shaft, Secondary Transmission	Arbre Cable Secondaire	Abtriebswelle	Arbre Transmision Secondaria
2	3625399 000		Ingranaggio 2ø Z.36 Su Secondario	Idler Gear 2. Gear 36-T	Engranage 2ø Z.36 Sur Secondaire	Losrad 2.Gang 36-Z	Engrnaje 2 Z.36 Sobre Secondario
3	3625027 000		Gabbia A Rulli 22x26x10	Needle Bear.K 22x26x10	Cage 22x26x10	Nadelkranz K 22x26x10 Geteilt	Jaula 22x26x10
4	3625286 000		Rondella Spec. 25,2x32x1,5	Stop Disk 25,2x32x1,5	Rondelle Spec. 25,2x32x1,5	Anlaufscheibe 25,2x32x1,5	Arandela Especial 25,2x32x1,5
5	3625033 000		Anello 25 X 1,2	Circlip 25x1,2	Bague 25x1,2	Sicherungsring 25x1,2	Anillo 25x1,2
6	3625403 000		Ingranaggio 6ø Z.25 Su Secondario	Sliding Gear 6. Gear 25-T	Engranage 6ø Z.35 Sur Secondaire	Schieberad 6.Gang 25-Z	Engranaje 6 Z.25 Sobre Secondario
9	3625401 000		Ingranaggio 4ø Z.32 Su Secondario	Sliding Gear 4. Gear 32-T	Engranage 4ø Z.32 Sur Secondaire	Losrad 4.Gang 32-Z	Engranaje Z.32 Sobre Secondario
10	3625400 000		Ingranaggio 3ø Z.34 Su Secondario	Sliding Gear 3. Gear 34-T	Engranage 3ø Z.34 Sur Secondaire	Losrad 3.Gang 34-Z	Engranaje 3 Z.34 Sobre Secondario
13	3625402 000		Ingranaggio 5ø Z.30 Su Secondario	Sliding Gear 5. Gear 30-T	Engranage 5ø Z.30 Sur Secondaire	Schieberad 5.Gang 30-Z	Engranaje 5 Z.30 Sobre Secondario
14	3625296 000		Rondella Spessore 20x32x1	Shim 20x32x1	Rondelle Epaisseur 20x32x1	Scheibe 20x32x1	Arandela Espesor 20x32x1
15	3625025 000		Gabbia A Rulli 20x26x12	Needle Bear.K 22x26x12	Cage 20x26x12	Nadelkranz K 20x26x12	Jaula 20x26x12
16	3625398 000		Ingranaggio 1ø Z.38 Su Secondario	Idler Gear 1. Gear 38-T	Engranage 1ø Z.38 Sur Secondaire	Losrad 1.Gang 38-Z	Engranaje 1 Z.38 Sobre Secondario
17	3625136 000		Rondella Spec. 17,2x30x1	Stop Disk 17,2x30x1	Rondelle Spec. 17,2x30x1	Anlaufscheibe 17,2x30x1	Arandela 17,2x30x1
18	3625121 000		Boccola Distanziale 12mm	Spacer Bushing 12mm	Bague Entratoise 12mm	Distanzbüchse 12mm	Anillo Distanciador 12mm
20	2564079 000		Pignone Z.14 5/8 1/4 Rr 4t	Sproket, Chain Z.14 5/8 1/4 Rr 4t	Pignon Z.14 5/8 1/4 Rr 4t	Kettenrad 14-Z	Pignon Z.14 5/8 1/4 Rr4t
20	2564081 000		Pignone Z.15 5/8 1/4 Rr 4t	Sproket, Chain Z.15 5/8 1/4 Rr 4t	Pignon Z.15 5/8 1/4 Rr4t	Kettenrad 15-Z	Pignon Z.15 5/8 1/4 Rr4t
20	3625088 000		Pignone Z.13	Sprocket 13-T	Pignon Z.13	Kettenrad 13-Z	Pinon Z.13
22A	1170013 000		Bullone Spec. M10x18 Fis. Pignone Rr4t	Special Bolt, Rr 4t	Boulon Spec. M10x1 Fix. Pignon Rr4t	Sk.Bundschraube	Tornillo Espec. M10x18 Fij.Pignon Rr4t
22B	2774787 000		Rondella Speciale Fis.Gio Pignone Rr4t	Washer	Rondelle Spec. Fixage Pignon Rr4t	Passcheibe	Arandela Espec. Fijacion Pinon Rr4t
22	3625287 000		Vite Con Molla A Tazza Fissaggio Pignone	Screw+Spring Washer	Vis A/Ressort Fixage Pignon	Schraube + Tellerfeder	Tornillo Muelle Fijacion Pignon
25	3625049 000		Anello Or 25,12x1,78 Nbr 70	O Ring 25,12x1,78 Nbr70	Or 25,12x1,78 Nbr 70	O-Ring 25,12x1,78	Or 25,12x1,78 Nbr 70
30	3625039 000		Cuscinetto A Sfere 6203	Ball. Bearing 6203	Roulement 6203	Rillenkugellager 6203 Jr2 C3	Cojinete 6203
31	3625086 000		Cuscinetto A Sfere 6203	Ball Bearing 6203	Roulement 6203	Zilinderrollenlag. Nj205	Cojinete 6203
32	3625047 000		Anello Paraolio 32x45x7	Shaft Seal Ring 32x45x7 Bsl Nbr	Joint Spy 32x45x7	Wellendichtring 32x45x7	Junta Aceite 32x45x7

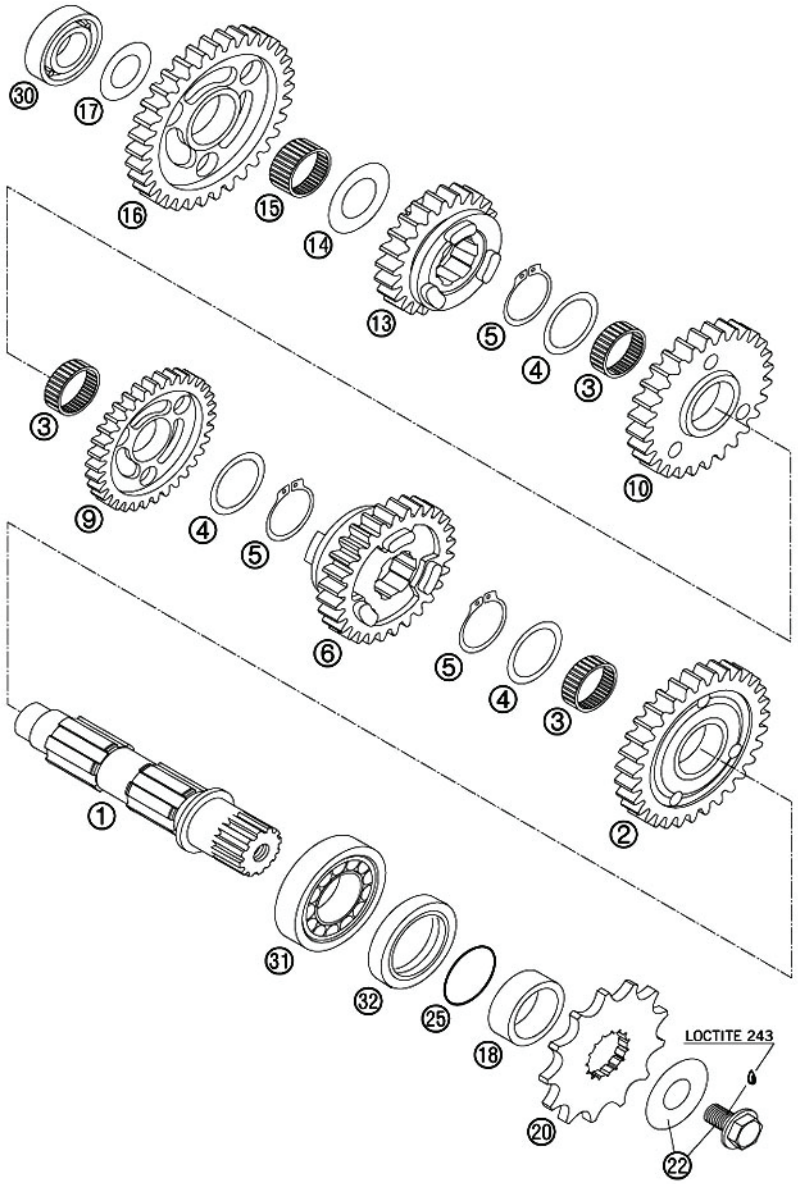

TRASMISSIONE SECONDARIA
TRANSMISSION II° - MAIN SHAFT
TRANSMISSION SECONDAIRE
GETRIEBE II° - ANTRIEBSWELLE
TRANSMISSION II°

400-450-525CC / 2005-2006

TAV.21

Pos Loc Pos Ps Pos	Numero Number Numéro Nùmero Nummer	Nota Note Note Nota Anm.	Descrizione	Description	Désignation	Beschreibung	Descripciòn
1	3625278 000		Albero Trasmissione Secondaria	Main Shaft, Secondary Transmission	Arbre Cable Secondaire	Abtriebswelle	Arbre Transmision Secondaria
2	3625280 000		Ingranaggio 2ø Z.31 Su Secondario	Idler Gear 2. Gear 31-T	Engranage 2ø Z.31 Sur Secondaire	Losrad 2.G 31-Z 25	Engranaje 2° Z.31 Sobre Secondario
3	3625027 000		Gabbia A Rulli 22x26x10	Needle Bear.K 22x26x10	Cage 22x26x10	Nadelkranz K 22x26x10 Geteilt	Jaula 22x26x10
4	3625286 000		Rondella Spec. 25,2x32x1,5	Stop Disk 25,2x32x1,5	Rondelle Spec. 25,2x32x1,5	Anlaufscheibe 25,2x32x1,5	Arandela Especial 25,2x32x1,5
5	3625033 000		Anello 25 X 1,2	Circlip 25x1,2	Bague 25x1,2	Sicherungsring 25x1,2	Anillo 25x1,2
6	3625284 000		Ingranaggio 6ø Z.21 Su Secondario	Idler Gear 6. Gear 21-T	Engranage 6ø Z.21 Sur Secondaire	Schieberad 6.G 21-Z 26	Engranaje 6° Z.21 Sobre Secondario
8	3625285 000		Rondella Spec.Fis.Ingr.3ø/4ø Alb. Prim.	Stop Disk 25,2x32x1,5	Rondelle Spec. Fix. Engr. 3/4 Arbre Pr	Anlaufscheibe 25,2x32x1,5	Arandela Especial Fijacion Engranaje 3/4 Arbre
9	3625282 000		Ingranaggio 4ø Z.26 Su Secondario	Sliding Gear 4. Gear 26-T	Engranage 4ø Z.36 Sur Secondaire	Losrad 4.G 26-Z 33	Engranaje 4° Z.26 Sobre Secondario
10	3625281 000		Ingranaggio 3ø Z.28 Su Secondario	Sliding Gear 3. Gear 28-T	Engranage 3ø Z.38 Sur Secondaire	Losrad 3.G 28-Z 28	Engranaje 3° Z.28 Sobre Secondario
13	3625283 000		Ingranaggio 5ø Z.23 Su Secondario	Sliding Gear 5. Gear 23-T	Engranage 5ø Z.23 Sur Secondaire	Schieberad 5.G 23-Z 29	Engranaje 5° Z.23 Sobre Secondario
14	3625296 000		Rondella Spessore 20x32x1	Shim 20x32x1	Rondelle Epaisseur 20x32x1	Scheibe 20x32x1	Arandela Espesor 20x32x1
15	3625025 000		Gabbia A Rulli 20x26x12	Needle Bear.K 22x26x12	Cage 20x26x12	Nadelkranz K 20x26x12	Jaula 20x26x12
16	3625279 000		Ingranaggio 1ø Z.34 Su Secondario	Idler Gear 1. Gear 34-T	Engranage 1ø Z.34 Sur Secondaire	Losrad 1.G 34-Z 30	Engranaje 1° Z.34 Sobre Secondario
17	3625136 000		Rondella Spec. 17,2x30x1	Stop Disk 17,2x30x1	Rondelle Spec. 17,2x30x1	Anlaufscheibe 17,2x30x1	Arandela 17,2x30x1
18	3625121 000		Boccola Distanziale 12mm	Spacer Bushing 12mm	Bague Entratoise 12mm	Distanzbüchse 12mm	Anillo Distanciador 12mm
20	2564079 000		Pignone Z.14 5/8 1/4 Rr 4t	Sproket, Chain Z.14 5/8 1/4 Rr 4t	Pignon Z.14 5/8 1/4 Rr 4t	Kettenrad 14-Z	Pignon Z.14 5/8 1/4 Rr4t
20	2564081 000		Pignone Z.15 5/8 1/4 Rr 4t	Sproket, Chain Z.15 5/8 1/4 Rr 4t	Pignon Z.15 5/8 1/4 Rr4t	Kettenrad 15-Z	Pignon Z.15 5/8 1/4 Rr4t
20	3625088 000		Pignone Z.13	Sprocket 13-T	Pignon Z.13	Kettenrad 13-Z	Pinon Z.13
22A	1170013 000		Bullone Spec. M10x18 Fis. Pignone Rr4t	Special Bolt, Rr 4t	Boulon Spec. M10x1 Fix. Pignon Rr4t	Sk.Bundschraube	Tornillo Espec. M10x18 Fij.Pignon Rr4t
22B	2774787 000		Rondella Speciale Fis.Gio Pignone Rr4t	Washer	Rondelle Spec. Fixage Pignon Rr4t	Passcheibe	Arandela Espec. Fijacion Pinon Rr4t
22	3625287 000		Vite Con Molla A Tazza Fissaggio Pignone	Screw+Spring Washer	Vis A/Ressort Fixage Pignon	Schraube + Tellerfeder	Tornillo Muelle Fijacion Pignon
25	3625049 000		Anello Or 25,12x1,78 Nbr 70	O Ring 25,12x1,78 Nbr70	Or 25,12x1,78 Nbr 70	O-Ring 25,12x1,78	Or 25,12x1,78 Nbr 70
30	3625039 000		Cuscinetto A Sfere 6203	Ball. Bearing 6203	Roulement 6203	Rillenkugellager 6203 Jr2 C3	Cojinete 6203
31	3625086 000		Cuscinetto A Sfere 6203	Ball Bearing 6203	Roulement 6203	Zilinderrollenlag. Nj205	Cojinete 6203
32	3625047 000		Anello Paraolio 32x45x7	Shaft Seal Ring 32x45x7 Bsl Nbr	Joint Spy 32x45x7	Wellendichtring 32x45x7	Junta Aceite 32x45x7

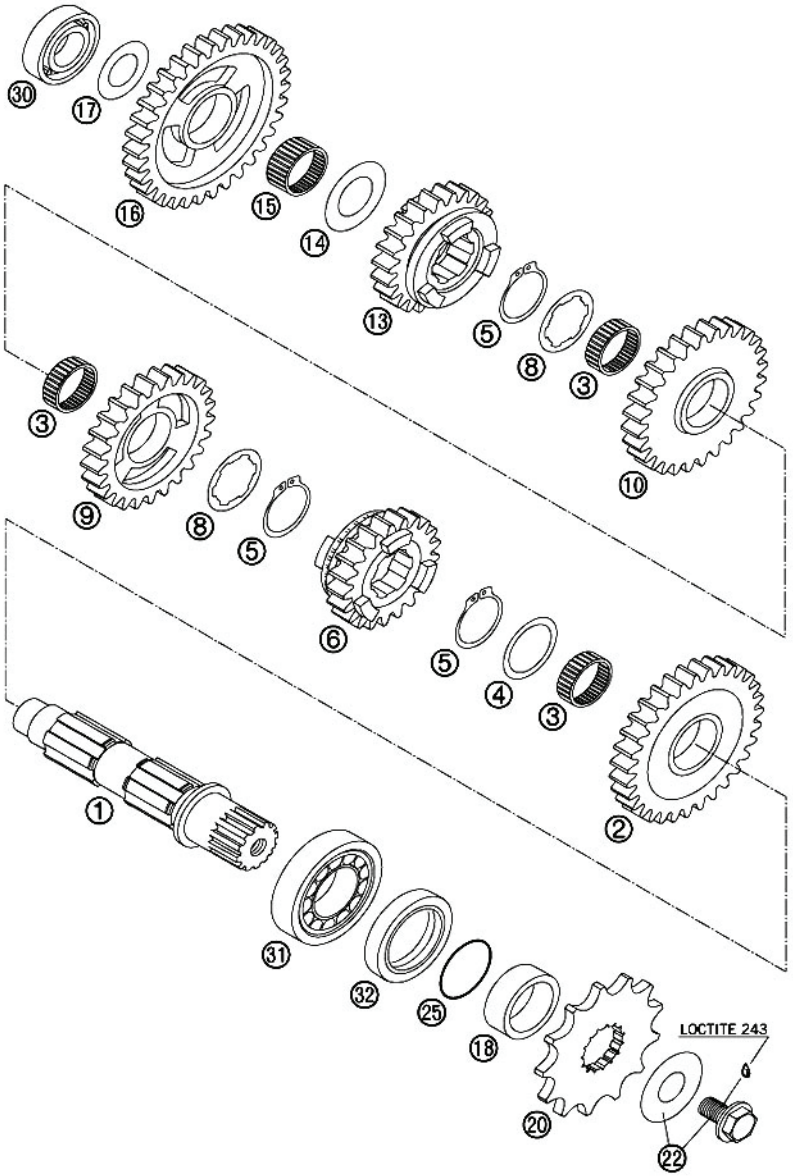

COMANDO CAMBIO
SHIFTING MECHANISM
BOITE A VITESSE
SCHALTUNG
MANDO CAMBIO

250-400-450-525CC / 2005-2006

VERS.2007-'08-'09
►PAG.36 Pos. 16,20

TAV.22

Pos Loc Pos Ps Pos	Numero Number Numéro Nùmero Nummer	Nota Note Note Nota Anm.	Descrizione	Description	Désignation	Beschreibung	Descripciòn
1	3625307 000		Leva Comando Cambio Cpl.	Shifting Lever Cpl.	Levier Selecteur De Vitesse	Schalthebel Kpl.	Palanca Mando Cambio
2	3625068 000		Bullone M6 X 16 10.9	Hh Screw M6 X 16 10.9	Boulon M6x16 10.9	Sk.Schraube M6x16 10.9	Tornillo M6x16 10.9
3	1346492 000		Distanziale 6,4.17.3 (Ktm)	Spacer, 6,4.17.3	Entretoise 6,4.17.3	Stahlscheibe 6,4x17x3	Distanciador 6,4.17.3
4	3625044 000		Anello Paraolio 14x24x6	Shaft Seal Ring 14x24x6 B	Joint Spy 14x24x6	Wellendichtring 14x24x6 B	Junta Aceite 14x24x6
5	3625120 000		Gabbia A Rulli 14,6x20x12	Needle Bear.K 14,6x20x12	Cage 14,6x20x12	Nedelhülse Hk 1412 14,6x20x12	Jaula 14,6x20x12
6	3625298 000		Forchetta Selezione 2ø/4ø	Shift Fork 2./4. Gear	Fourche Selection 2ø/4ø	Schaltgabel 2./4. Gang	Horquilla 2/4
7	3625300 000		Albero Selezione Completo	Shift Shaft Cpl.	Arbre Selection Complet	Schaltwelle Kpl.	Arbre Completo
8	3625299 000		Forchetta Selezione 1ø/3ø 400/450/525	Shift Fork 1./3. Gear, 400/450/525	Chape Selection 1ø/3ø 400/450/525	Schltgabel 1./3. Gang 400/450/525cc	Horquilla 1/3 400/450/525
8	3625405 000		Forchetta Selezione 1ø/3ø 250	Shift Fork 1./3. Gear, 250	Chape Selection 1ø/3ø 250	Schltgabel 1./3. Gang 250cc	Horquilla1/3 250cc
9	3625128 000		Rondella 14x30x1	Stop Disk 14x30x1	Rondelle 14x30x1	Anlaufscheibe 14x30x1	Arandela 14x30x1
10	3625125 000		Molla Ritorno 2,2mm	Return Spring 0,8mm	Ressort 2,2mm	Rückholfeder 2,2mm	Nuelle 2,2mm
12	3625138 000		Molla Tensione 0,8mm	Tensioning Spring 0,8mm	Ressort Tensino 0,8mm	Spannerfeder 0,8mm	Muelle 0,8mm
13	3625305 000		Albero Forchette Selezione Cambio	Shift Rail 11,8x105mm	Arbre Vitesses	Schaltschiene Abt. 11,8x105mm	Arbre Horquilla
14	3625188 000		Molla Pressione 0,9mm	Pressure Spring 0,9mm	Ressort Pression 0,9mm	Druckfeder 0,9mm	Muelle Pression 0,9mm
15	1129035 000		Boccola Per Forchette Cr-65/2001 - Rr4t	Bush	Douille Pour Fourches Cr-65/2001	Schaltrolle 6x8x5,2	Anillo Cr-65/2001 - Rr4t
16	3625303 000		Camma Arresto Marce Completa	Shift Lacating Drum Cpl.	Camme Complete	Schaltarretiertung Alu Kpl	Camma Completa
17	3625124 000		Ventaglio Albero Comando Cambio Cpl.	Sliding Plate Cpl.	Eventail Arbre Vitesse Cpl.	Gleitblech Kpl.	Abanico Ciguenal Mado Cambio Cpl.
18	3625074 000		Bullone M6 X 30	Hh Screw M6 X 30	Boulon M6x30	Isk.Schraube M6x30	Tornillo M6x30
19	3625042 000		Cuscinetto A Sfere 61805 C3	Ball Bearing 61805 C3	Roulement 61805 C3	Rillenkugellager 61805 C3	Cojinete 61805 C3
20	3625127 000		Leva Arresto Marce	Locking Lever Cpl	Levier Arret Vitesses	Arretierhebel Kpl.	Palanca
21	3625006 000		Bullone 5.20 Rs Ch 8	Bolt 5.20	Boulon 5.20 Rs Ch 8	Sk.Bundschraube M5x20 Sw=8	Tornillo 5.20 Rs Ch 8
22	3625129 000		Distanziale Levetta Arresto Marce	Sleeve For Locking Lever	Entratoise Levier Arret Vitesses	Hülse Für Arretierhebel	Distanciador Palanca
23	3625306 000		Molla Levetta Arresto Marce	Spring For Locking Lever 2,3mm	Ressort Levier Arret Vitesse	Arretierhebelfeder 2,3mm	Muelle Palanca
24	3625304 000		Albero Forchetta 6ø Marcia	Shift Rail 11,8x89mm	Arbre Chape 6ø Vitesse	Schaltschiene Ant. 11,8x89mm	Arbre Horquilla 6°
25	3625297 000		Forchetta Selezione 5ø/6ø 400/450/525	Shift Fork 5./6. Gear 400/450/525	Chape Selection 5ø/6ø 400/450/525	Schaltgabel 5./6. Gang, 400/450/525cc	Horquilla 5/6 400/450/525
25	3625404 000		Forchetta Selezione 5ø/6ø 250cc	Shift Fork 5./6. Gear, 250cc	Chape Selection 5ø/6ø 250cc	Schaltgabel 5./6. Gang, 250cc	Horquilla 5/6 250cc
26	3625301 000		Camma 6 Marce	Shiftroller 6-Gear	Camme	Schaltwalze 6-Gang	Camma 6
27	3625126 000		Guida Molla Comando Cambio	Spring Guide	Guide Ressort Commande Vitesse	Federführung	Guia Muelle Mando Cambio

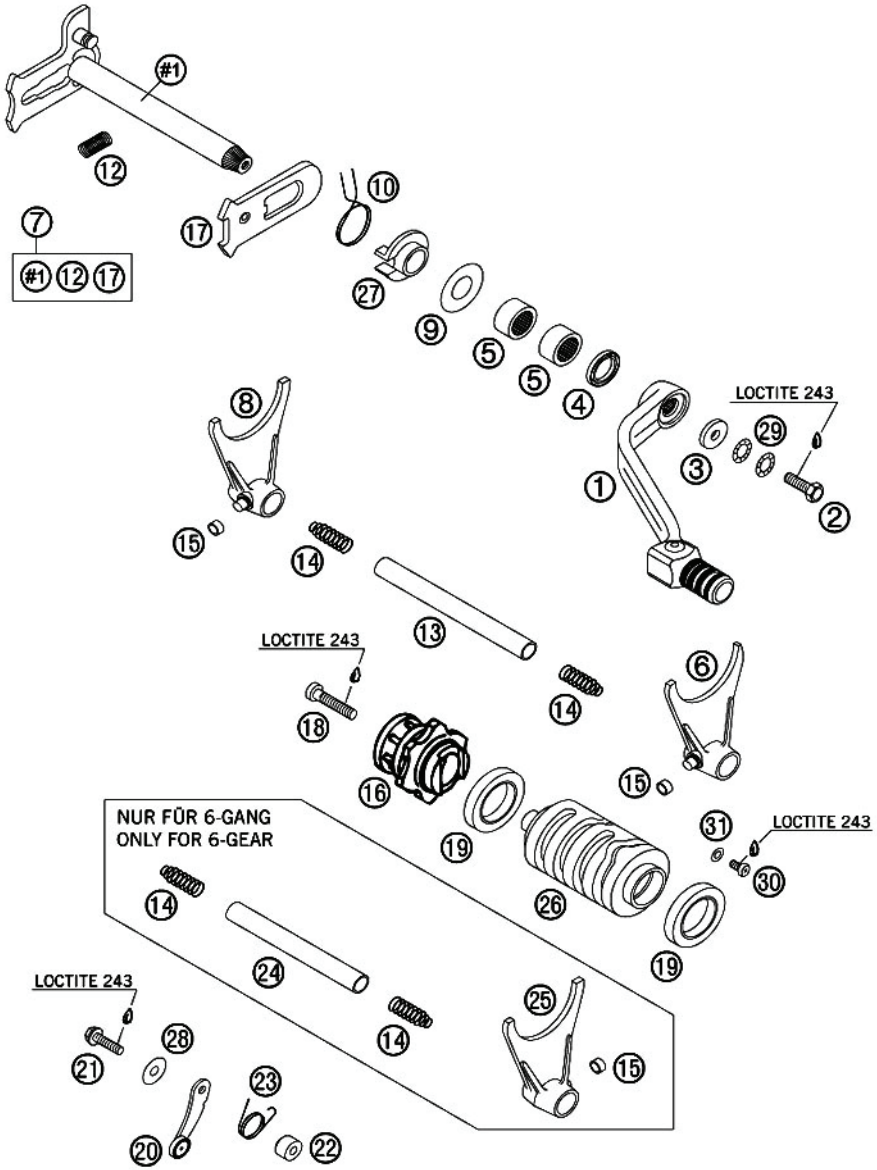

Pos Loc Pos Ps Pos	Numero Number Numéro Nùmero Nummer	Nota Note Note Nota Anm.	Descrizione	Description	Désignation	Beschreibung	Descripciòn
28	3625018 000		Rondella 5x15x2	Washer 5x15x2	Rondelle 5x15x2	Scheibe 5x15x2	Arandela 5x15x2
29	2739001 000		Rondella 6 Grower (Ktm)	Washer 6	Rondelle 6 Grower	Nordlockscheiben M6 (Paar) Dac	Arandela 6 Grower
30	3625077 000		Bullone M5 X 8	Flat Head Screw M5 X 8	Boulon M5x8	Linsenschraube M5x8	Tornillo M5x8
31	3625015 000		Guarnizione	Washer	Joint	Unterlegscheibe Din 125 A 5,3	Junta

2007/2008/2009 Versione/Version 400 - 450 - 525 cc

POS.	COD.BETA	DESCRIZIONE	DESCRIPTION
16	3625487 000	Camma arresto marce completa	Ship drum locating cpl
20	3625488 000	Leva arresto marce	Locking lever cpl

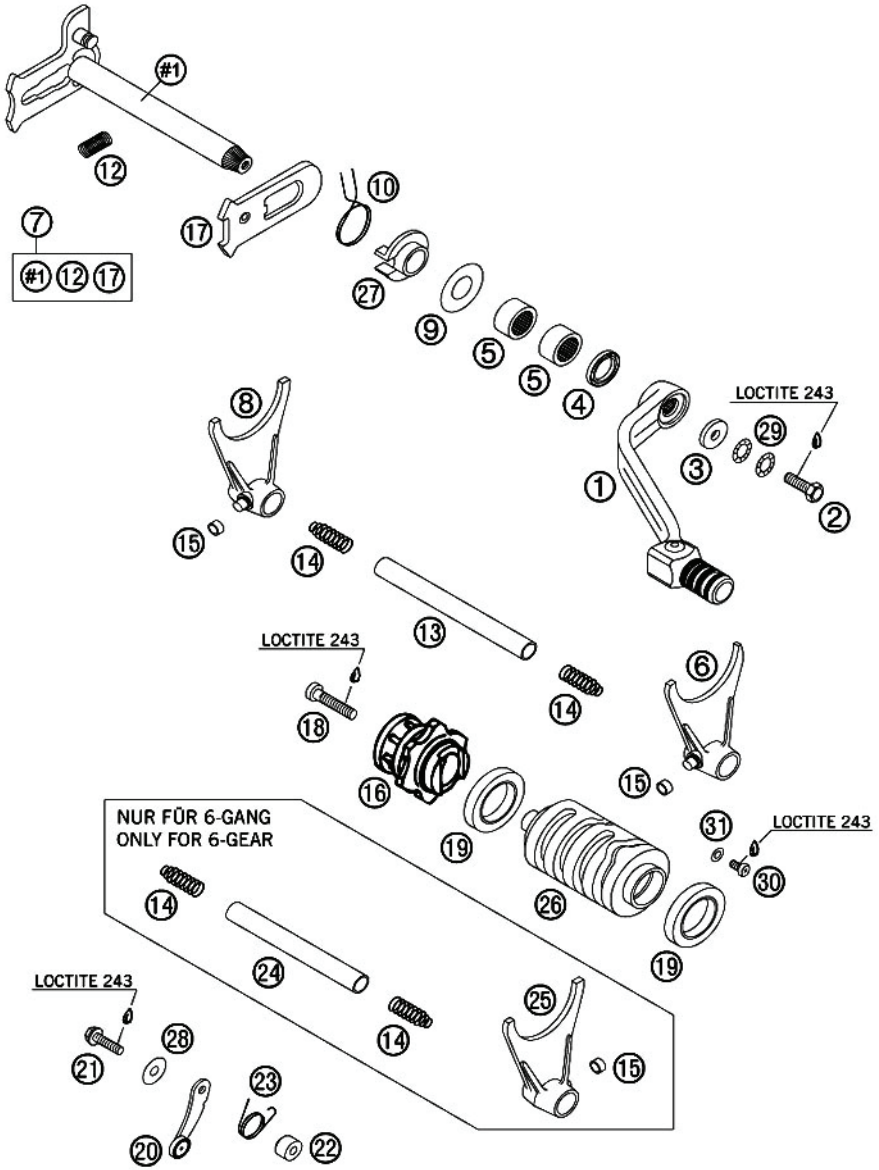

ATTREZZATURE - PARTICOLARI NON FIGURATI
SPECIAL TOOLS - SUPPLEMENTARY OARTS LIST
OUTILS - PARTICULIERS PAS MENTIONNES
SPEZIALWERKZEUGE - NICHT VERZECHNETE TEILE
APAREJOS - PARTICULARES NO FIGURADOS

/ 2005-2006

TAV.23

Pos Loc Pos Ps Pos	Numero Number Numéro Nùmero Nummer	Nota Note Note Nota Anm.	Descrizione	Description	Désignation	Beschreibung	Descripciòn
1	3625132 000		Attrezzatura Universale Mont.Motore Exc	Universal Mounting Rack '96	Outils Universale Montage Moteur Exc	Universalmontagebock	Aparejos Universales Montaje Motor Exc
2	3625198 000		Staffa Supporto Motore Racing	Engine Holder For Racing 2000	Etrier Support Moteur Racing	Motorhalter Für Racing	Abrazadera Soporte Motor Racing
3	3625202 000		Attrezzatura Per Montaggio Maglie Catena	Rivetting Tool Timing Chain	Outils Montage Chaine	Nietwerkzeug Steuerkette Kpl.	Aparejos Montaje Cadena
4	3625200 000		Attrez.Mont.Anelli Paraolio Pompa Acqua	Mounting Sleeve Seal Ring For Water Pump	Outils Montage Joint Spy Pompe Eau	Montagehülse Wellendichtring F.Wassserpump.Wellendichtring	Aparejos Motaje Juntas Aceite Bobmba Agua
5	3625097 000		Pinza Speciale Anelli	Special Circlip Plier	Pince Speciale Bagues	Seegerringzange Verkehrt	Pinza Especial Anillos
6	3625203 000		Estrattore Trasmissione Primaria	Extractor Prim.Gear Cpl.	Extracteur Tranmission Primaire	Abzieher Primärrad Kpl.	Extractor Transmision Primaria
7	3625174 000		Anello Di Compressione X Pistone D=75mm	Piston Ring Compressor D=75mm	Bague Compression Piston D=75mm	Kolben-Montagering D=75mm	Anillo Compresion Piston D=75mm
7	3625175 000		Anello Di Compressione X Pistone D=89mm	Piston Ring Compressor D=89mm	Bague Compr. Piston D=89mm	Kolben-Montagering D=89mm	Anillo Compresion Piston D=89mm
7	3625384 000		Anello Di Compressione X Pistone D=95mm	Piston Ring Compressor D=95mm	Bague Piston D=95mm	Kolben-Montagering D=95mm	Anillo De Compression Piston D=95mm
8	3625001 000		Loctite 243 Blu 6ccm	Loctite 243 Blu 6ccm	Loctite 243 Blue 6ccm	Loctite 243 Blau 6ccm	Loctite 243 Blu 6ccm
9	3625081 000		Estrattore Boccole	Bushing Extractor	Extracteur Bagues	Lagerauszieher	Extractor Anillos
10	3625082 000		Estrattore Cuscinetti Interni 12-16mm	Intern. Bear. Puller 12-16mm	Extracteur Roulements Int. 12-16mm	Einsatz 12-16 Mm	Extractor Cojinetes Int. 12-16mm
10	3625083 000		Estrattore Cuscinetti Interni 18-23mm	Intern. Bear. Puller 18-23mm	Extracteur Roulements Int. 18-23mm	Einsatz 18-23 Mm	Extractor Cojinetes Int. 18-23mm
10	3625084 000		Estrattore Cuscinetti Interni 5-7mm	Intern. Bear. Puller 5-7mm	Extracteur Roulements Int. 5-7mm	Einsatz 5-7 Mm	Extractor Cojinetes Int. 5-7mm
11	3625204 000		Attrezzauta Di Verifica Guida Valvole	Limit Plug Gauge F.Valve Guide	Outils Guide Valves	Grenzlehrdorn F.Ventilführung	Aparejos Gujia Valvulas
12	3625207 000		Attrez. Montag. Anello Per Friz. Interna	Mounting Ring For Inner Clutch	Outils Montage Bague Embrayage Int.	Montagering Für Mitnehmer	Aparejos Montaje Anillo Embrague Int.
13	3625208 000		Coperchio Di Protezione Albero	Protection Cover F.Main Shaft	Couvercle Protection Arbre	Schutzkappe Für Abtriebswelle	Tapa Proteccion Arbre
14	3625205 000		Estrattore Per Ingranaggi	Extractor For Timing Gear	Extracteur Engranages	Zweiback.Abzieher Steuerritzel	Extractor Engranajes
15	3625201 000		Attrezzature Molle Valvole	Valve Spring Lever	Outils Ressorts Valves	Ventilfederheber	Aparejos Muelles Valvulas
16	3625193 000		Attrezzature Montag.Anelli Interni Nj206	Mounting To0l Inner Ring Nj206	Outils Montage Bagues Int. Nj206	Montagew.F.Lagerinnenr. Nj206	Aparejos Montaje Anillo Int. Nj206
17	3625238 000		Chiave Di Controllo	Mixt. Control Screw Factory	Cle De Controle	Gem.Reg.Schraube Factory	Llave De Controle
18	3625173 000		Estrattore Volano	Flywheel Extractor	Extracteur Volant	Schwungradabzieher	Extractor Volante Magnetico
19	3625000 000		Silicone (Tubetto)	Silicon Gasket Three-Bond	Silicon (Tube)	Silikondichtmasse Three-Bond	Silicon
20	3625098 000		Attrezzatura Montag.Catena Distribuzione	Holding Spanner For Sprocket	Outils Montage Chiane De Distribution	Halteschlüssel F. Kettenritzel	Aparejos Montaje Cadena Distribucion

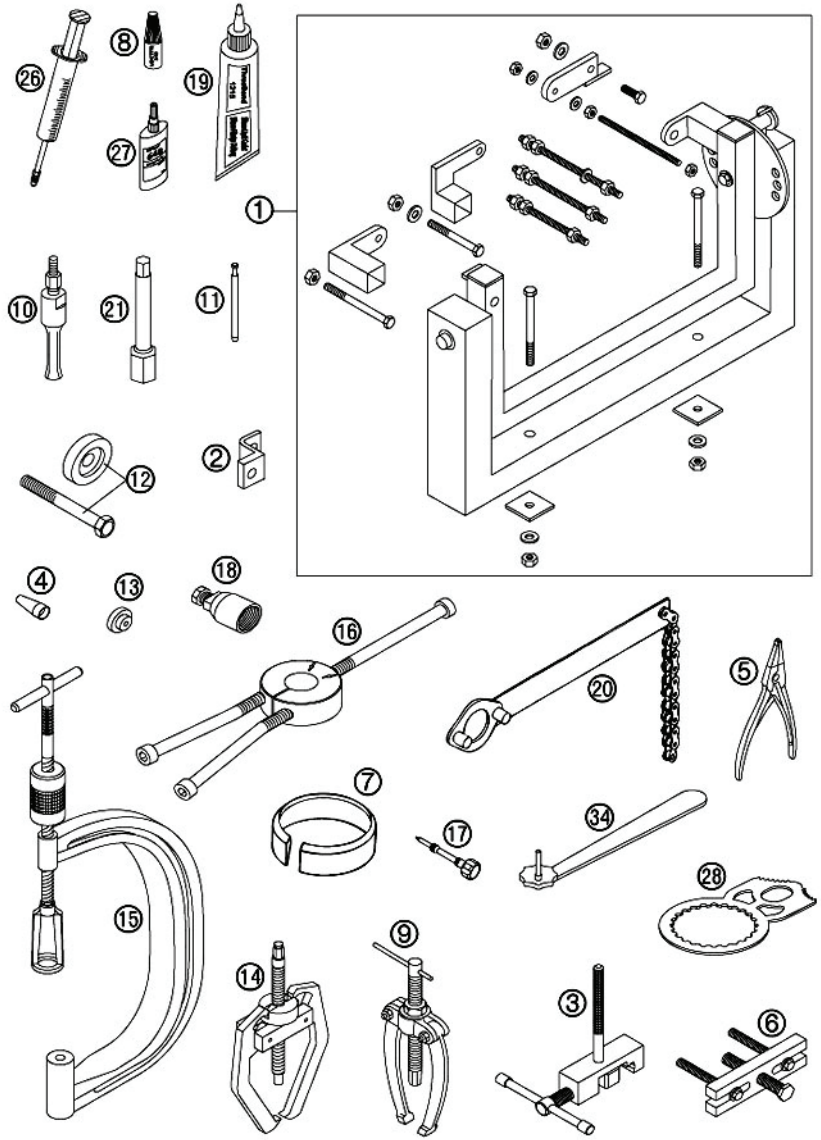
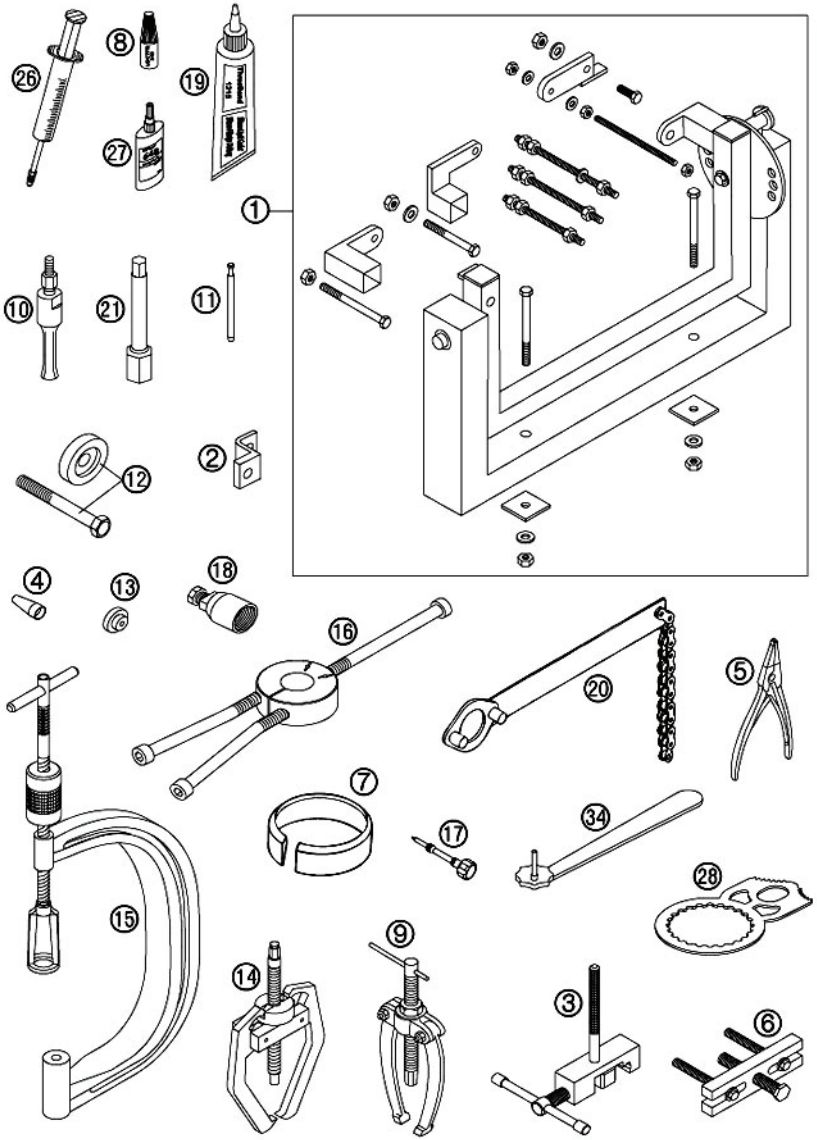
Pos Loc Pos Ps Pos	Numero Number Numéro Nùmero Nummer	Nota Note Note Nota Anm.	Descrizione	Description	Désignation	Beschreibung	Descripciòn
21	3625209 000		Chiave Candela 13/16	Spark Plug Wrench 13/16	Cle Bougie 13/16	Zündkerzenschlüssel 13/16	Llave Bujia 13/16
26	3625090 000		Siringa Per Olio Spurgo Frizione	Vent Injektion Hydr. Clutch	Seringat Huile Embrayage	Entlüft.Spritze Hydr. Kup-plung	Jeringa Aceite Embrague
27	3625194 000		Loctite 648 Green 24ml	Loctite 648 Verde 6ccm	Loctite 648 Green 24ml	Loctite 648 Grün 24ml	Loctite 648 Green 24ml
28	3625199 000		Estrattore Frizione	Clutch Holder	Extracteur Embrayage	Kupplumgshalter Racing	Extractor Embrague
34	3625206 000		Chive Di Controllo	Wrench F.Mixture Control Screw	Cle De Controle	Schlüssel Gemis-chreg.Schraube	Llave De Controle
	1514606 000		Fascetta Carburatore Rr 4t	Clamp	Tige Carburateur Rr4t	Schelle F. Bremsschlauch	Brida Carburador Rr4t
	1884981 000		Interruttore Avviamento Rr 4t	Start Switch	Interrupteur Starter Rr4t	Starterschalter	Interruptor Arranque Rr4t
	2728101 000		Regolatore Motore 250/400/450/525 Exc	Rectifier, Engine 250/400/450/525 Exc	Regulateur Moteur 250/400/450/525 Exc	Regler, 250/400/450/525 Exc	Regolador Motor 250/400/450/525 Exc
	2728471 000		Relais Avviam. Mot. 250/400/450/525 Exc	Relais, Starting	Relais Demarrage Moteur 250/400/450/525	Starterrelais, 250/400/450/525 Exc	Relais Arranque Motor 250/400/450/525 Exc
	2911991 000		Temostato Completo Rr4t	Thermostat Box, Rr 4t	Thermostat Complet Rr4t	Kompletter Thermostat	Termostato Completo Rr4t
	3625427 000		Kit Trasformazione Exc Da 250cc A 350	Modification Kit Exc,From 250cc To 350cc	Jeu Transformation Exc De 250cc A 350cc	Schraube, 350cc	Juego Transformacion Exc Desde 250cc A 350cc