BETA EVO 80 SR MY 2020

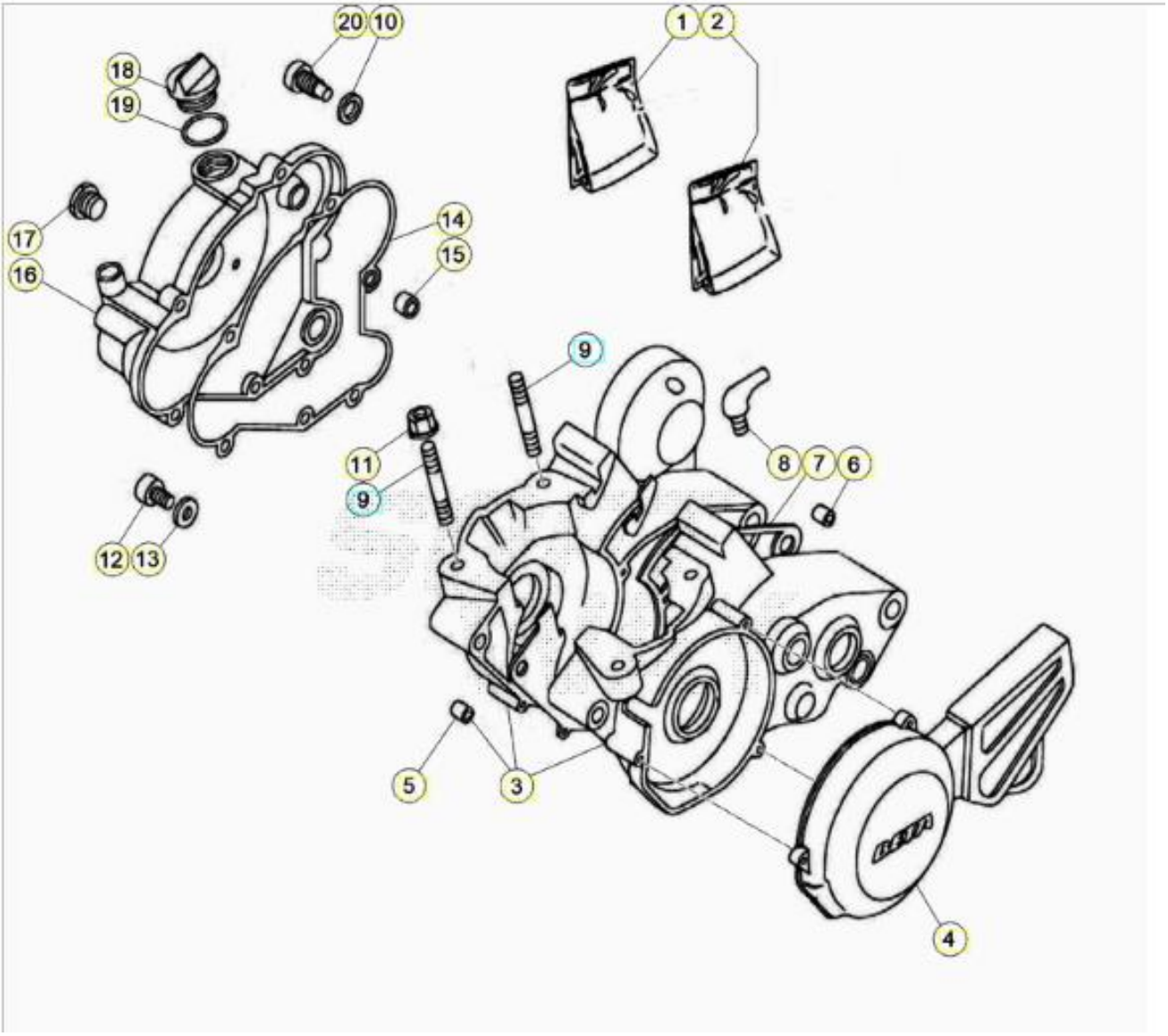

ORDER QTY	REF. NO.	PART NO.	CRANKCASE DESCRIPTION	EVO 80 JUNIOR
	1	28.06887.800	OIL SEAL SET, REV/EVO 80	1
	2	28.08067.800	GASKET SET, REV/EVO 80	1
	3	12.06232.800	CRANKCASE, REV 50/80 '07 '08 .RICAM	1
	4	12.70084.057	FLYWHEEL COVER, REV/EVO 80	1
	5	16.41510.000	DOWEL	1
	6	16.41530.000	DOWEL	1
	7	16.55030.000	CRANKCASE GASKET RK6.50	1
	8	27.23470.000	BREATHER PIPE HOSE	1
	9	25.98050.000	STUD BOLT 8.41	2
	10	16.49100.000	GASKET 8.12.0,5	1
	11	13.17121.000	NUT M8, SPECIAL CH.10	1
	12	11.58020.000	SPECIAL BOLT	1
	13	16.50511.000	COPPER GASKET 10.15.2	1
	14	16.71520.000	CLUTCH COVER GASKET RK6.50	1

	15	16.37010.000	DOWEL 9.15	1
	16	004.010100.033	CLUTCH COVER	1
	17	29.10030.000	OIL PLUG ZERO.91	1
	18	29.09600.000	OIL FILLER PLUG RK6.50	1
	19	10.66340.000	OIL SEAL 16.3	1
	20	31.88500.000	SHIFT CONTROL SCREW RK6.50	1

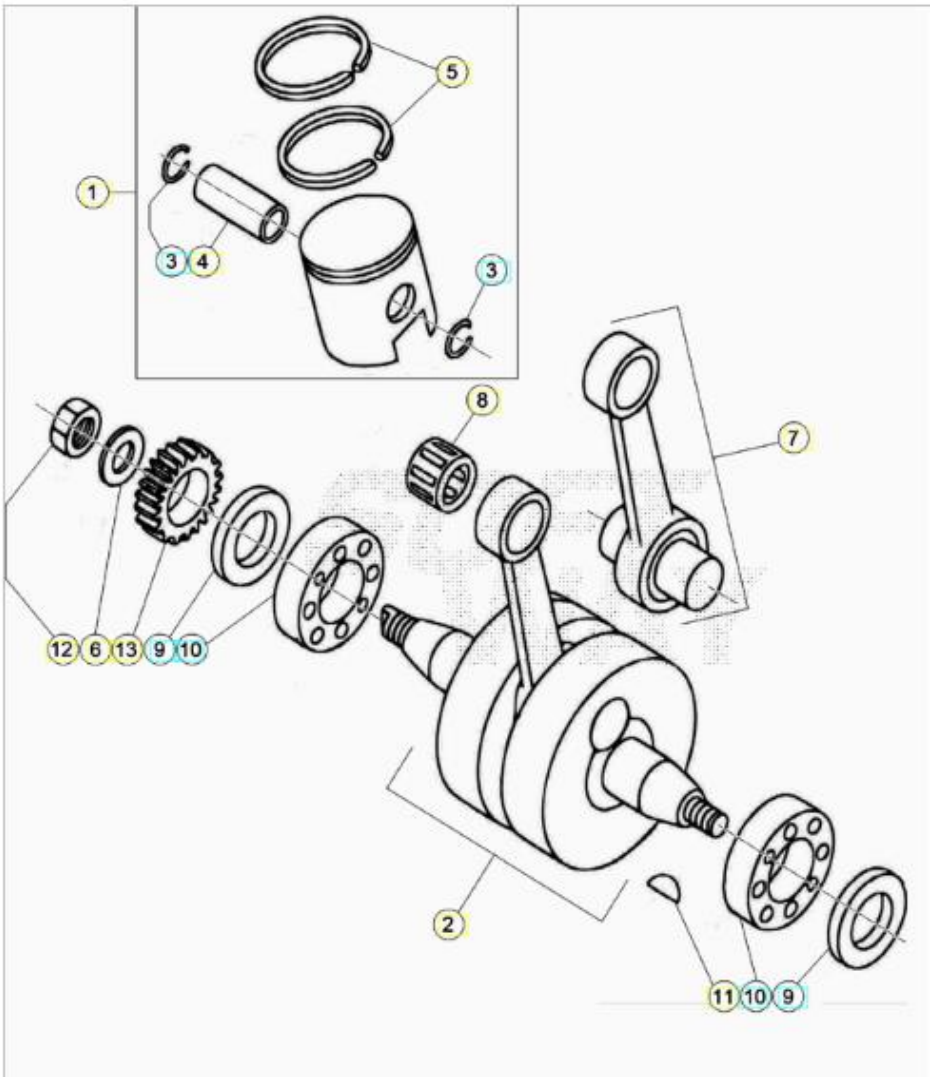

ORDER QTY	REF. NO.	PART NO.	CRANKSHAFT PISTON DESCRIPTION	EVO 80 JUNIOR
	1	25.80270.800	PISTON D.48 ASSY	1
	2	10.00682.000	CRANKSHAFT, REV/EVO 80	1
	3	10.42010.000	CIRCLIP	2
	4	28.93620.000	PISTON PIN 12.40	1
	5	28.60180.000	PISTON RING D.48 AC RK6	1
	6	27.61550.000	WASHER 14,3.20.1	1
	7	11.03716.800	CONNECTING ROD ASSY, REV/EVO 80	1
	8	16.11500.000	NEEDLE BEARING 12.15.15	1
	9	10.64111.000	OIL SEAL 20.35.6/6,5 VYTON	2
	10	12.99022.000	BALL BEARING 20.52.12 NTN	2

	11	12.46000.000	WOODRUFF KEY 3.3,7.9,7	1
	12	13.28951.000	14.1,25.5.CH.22 SPECIAL BOLT	1
	13	29.07303.800	PRIMARY TRANSMISSION	1

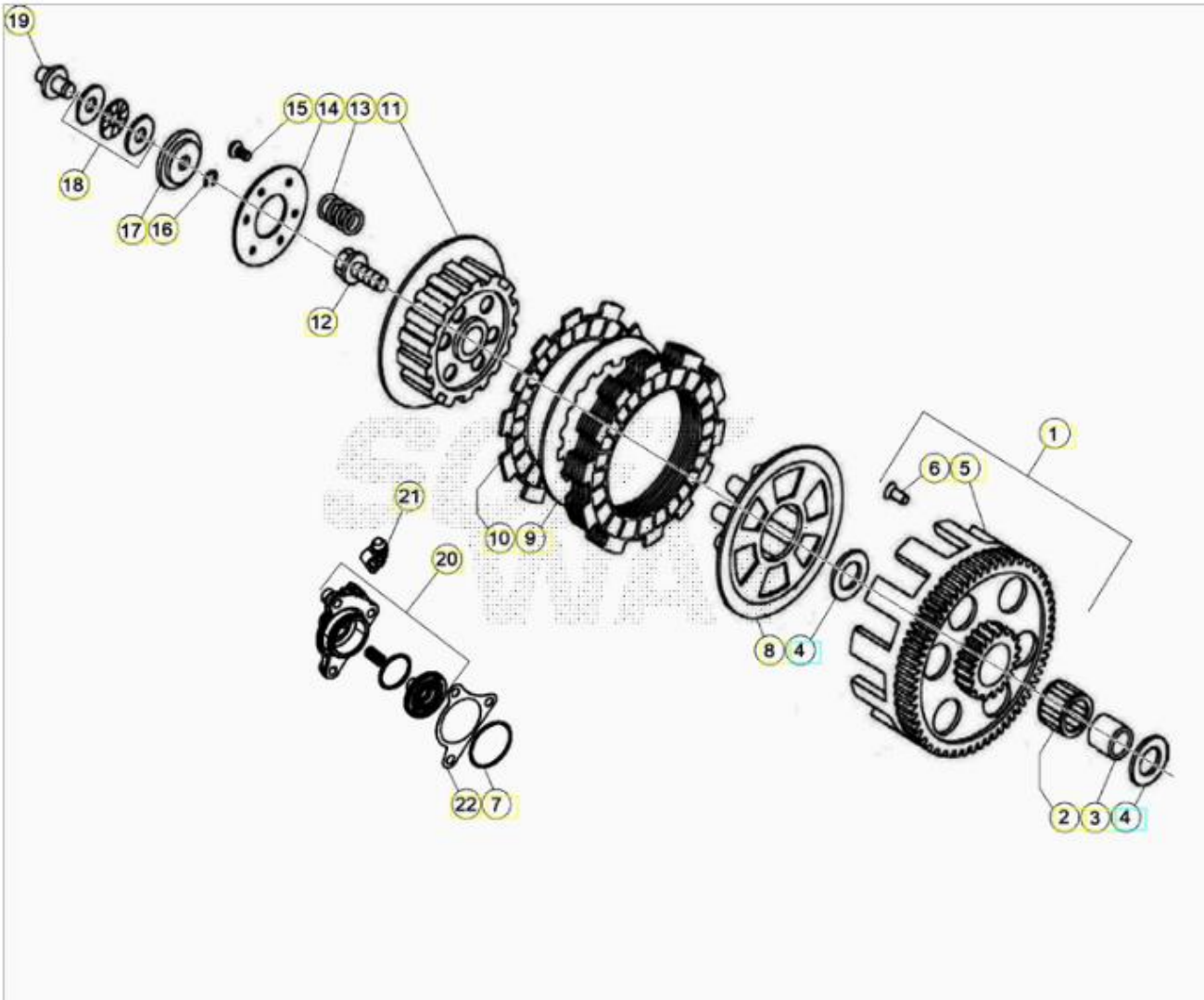

ORDER QTY	REF. NO.	PART NO.	CLUTCH DESCRIPTION	EVO 80 JUNIOR
	1	29.07303.800	PRIMARY TRANSMISSION	1
	2	16.17280.000	NEEDLE BEARING 21.25.17	1
	3	11.27120.000	BUSH	1
	4	27.71100.000	BOLT	2
	5	12.20770.000	CLUTCH HOUSING RK6.50	1
	6	27.31640.000	RIVET 5.9	1
	7	10.66840.000	O.RING 33X1,5	1
	8	12.29593.000	PRESSURE PLATE REV 80	1
	9	13.38130.000	STEEL PLATE RK6.50	1
	10	004.030100.000	CLUTCH PLATE	1
	11	29.09613.000	CLUTCH CENTER, REV 80	1
	12	11.59150.000	BOLT	1
	13	22.65093.000	CLUTCH SPRING REV/EVO 80	1

	14	13.42050.000	SPRING RETAINER CLUTCH DISK REV 80	1
	15	31.34400.000	SCREW 6.20	1
	16	28.22610.000	SEEGER 6E	1
	17	032.030890.000	CUP	1
	18	16.11250.000	NEEDLE BEARING	1
	19	25.52991.000	CR65 2002 CLUTCH PIN	1
	20	004.030808.000	CLUTCH SLAVE CYLINDER CPL.	1
	21	28.91050.800	BLEED WITH RUBBER	1
	22	006.030850.000	GASKET CLUTCH SLAVE CYLINDER	1

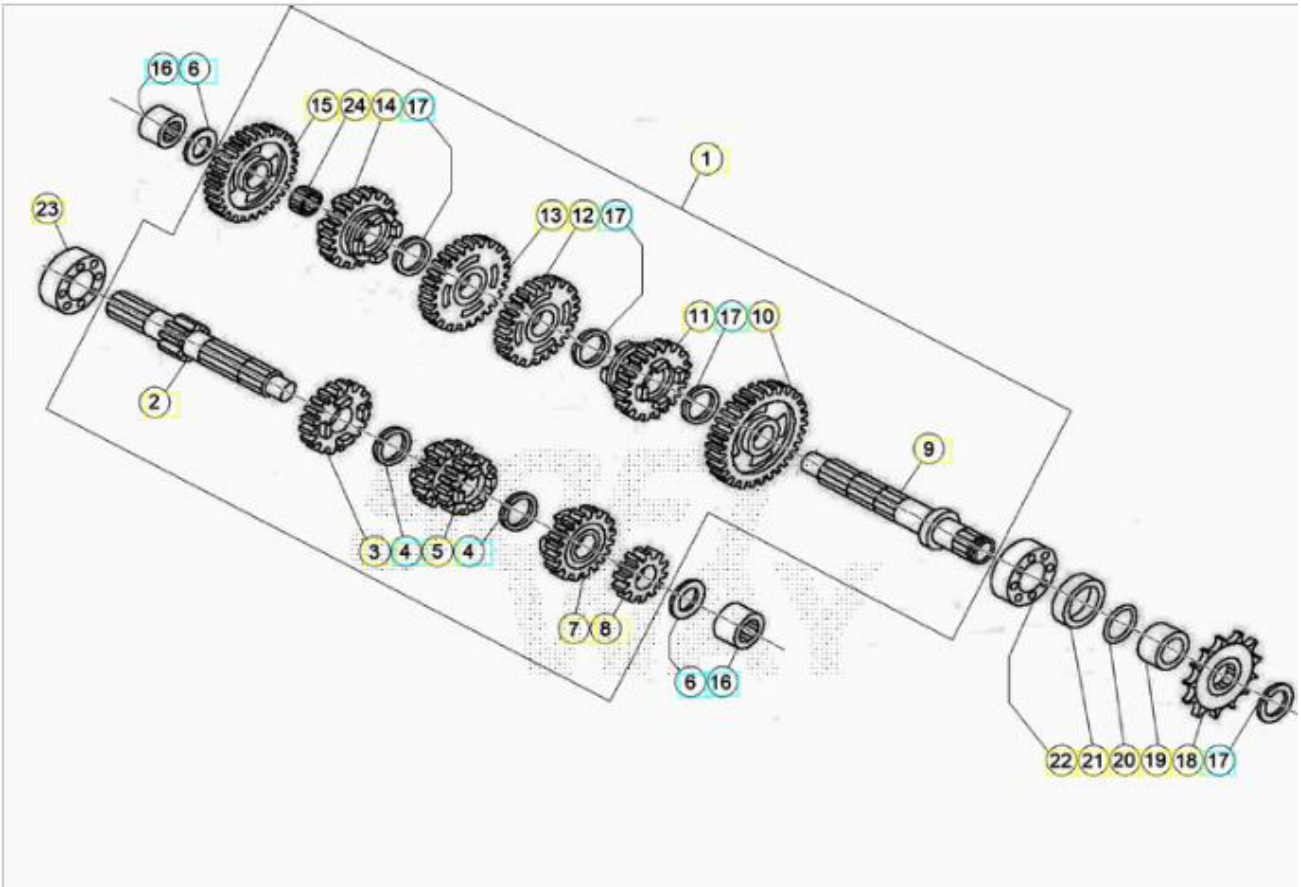

ORDER QTY	REF. NO.	PART NO.	TRANSMISSION DESCRIPTION	EVO 80 JUNIOR
	1	12.00686.800	REV 80 COMPLETE GEAR BOX	1
	2	10.23520.800	MAIN SHAFT RK6.50	1
	3	18.38412.800	5TH GEAR LAYSHAFT REV 80	1
	4	28.24950.000	SEEGER 17 SW	2
	5	18.37652.800	3/4 TH GEAR PRIMARY SHAFT CR.65/200	1
	6	27.60500.000	WASHER 12.25.1	2
	7	18.38742.800	REV 80 6TH GEAR MAINSHAFT	1
	8	18.34110.800	2ND GEAR.MAINSHAFT TECHNO.50	1
	9	10.28051.800	LAYSHAFT RR/CR.'99	1
	10	18.52030.800	2ND GEAR.LAYSHAFT TECHNO.50	1

	11	18.67142.800	6TH GEAR REV 80	1
	12	18.61500.800	3RD GEAR.LAYSHAFT RK6.50	1
	13	18.64100.800	4TH GEAR.LAYSHAFT RK6.50	1
	14	18.66442.800	5TH GEAR LAYSHAFT REV 80	1
	15	18.43023.800	1ST GEAR.LAYSHAFT RR.50/99	1
	16	11.22250.000	NEEDLE BEARING 12.19.12	2
	17	28.25410.000	SEEGER AS 20E	4
	18	25.61050.000	SPROCKET 11 TEETH TR.125	1
	19	13.55250.000	SPROCKET SPACER RK6.50	1
	20	10.66350.000	OIL SEAL 18,77.22,33.1,78	1
	21	10.64700.000	OIL SEAL 26.35.7	1
	22	12.98000.000	BALL BEARING 20.42.12	1
	23	12.95500.000	BAL BEARING	1
	24	16.12650.000	NEEDLE BEARING 14.18.8	1

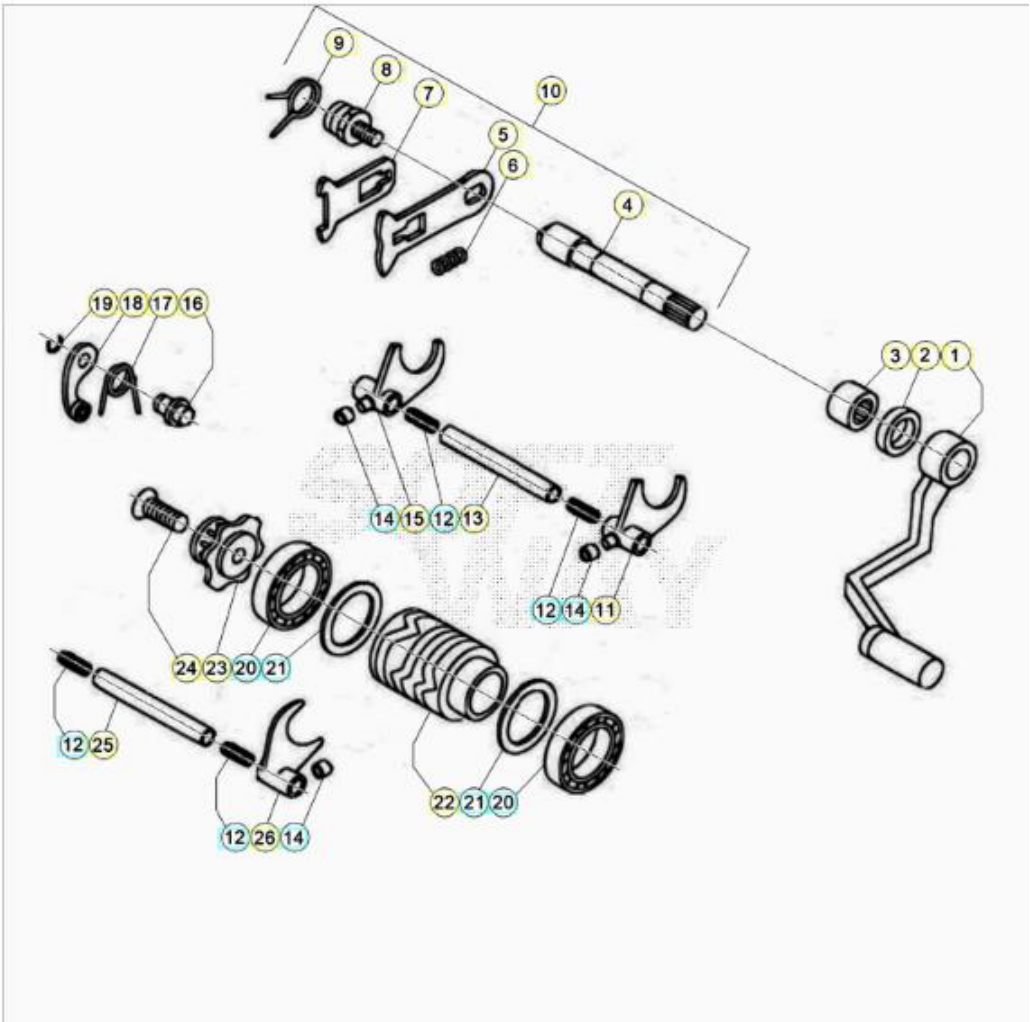

ORDER QTY	REF. NO.	PART NO.	GEAR SHIFT CONTROL DESCRIPTION	EVO 80 JUNIOR
	1	004.050000.000	SHIFT LEVER EVO.80	1
	2	10.47500.000	OIL SEAL 12.20.5	1
	3	11.22200.000	NEEDLE BEARING 12.18.12	1

	4	10.12010.000	SELECTOR SHAFT RK6.50	1
	5	31.20975.800	SHIFT CONTROL FORK ASSY CR85	1
	6	22.68010.000	SPRING, SHIFT	1
	7	31.20980.800	SLIDING SHIFT CONTROL FORK ASSY	1
	8	25.54410.000	SHIFT CONTROL FIXING PIN RK6.50	1
	9	22.72030.000	SPRING, RETURNING SELECTOR SHAFT	1
	10	10.12010.800	COMPLETE SELECTOR SHAFT RK6.50	1
	11	15.64012.000	SELECTOR FORK 34 (1/4 SPEED) CR.65/	1
	12	22.65015.000	SPRING, PIN SELECTOR FORK	4
	13	25.51021.000	PIN, SELECTOR FORK 10.80	1
	14	11.29035.000	BUSH	3
	15	15.64011.000	SELECTOR FORK 34 (2/3 SPEED) CR.65/	1
	16	25.54430.000	PIN, LOCATING LEVER	1
	17	22.39581.000	SPRING FOR GEAR LOCK CR.65/2001	1
	18	21.17150.000	LOCATING LEVER ASSY	1
	19	28.22700.000	SEEGER 10E	1
	20	12.99405.000	BALL BEARING 25.37.7	2
	21	27.73695.050	WASHER 25.32.0,50	2
	22	12.19113.000	CAM CR.65/2001	1
	23	12.19122.000	CAM FOR GEAR LOCK CR.65/2001	1
	24	31.30510.000	SCREW 6.30 TSPCE	1
	25	25.51011.000	SELECTOR FORK PIN 10.67,5 CR.65/200	1
	26	15.64031.000	SELECTOR FORK 23 (5/6 SPEED) CR.65/	1

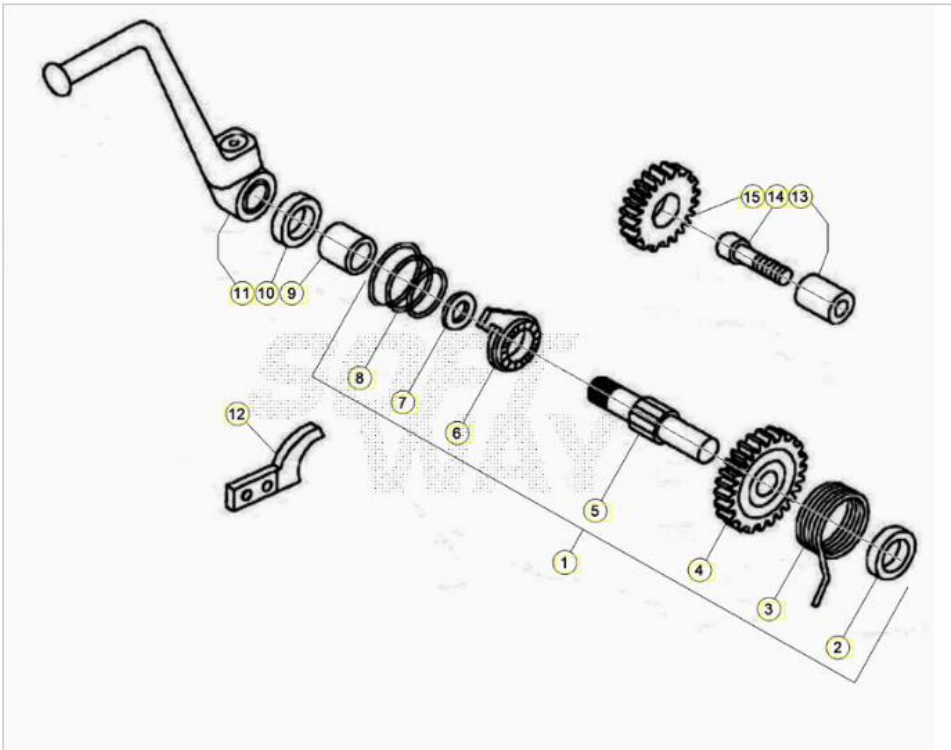

ORDER QTY	REF. NO.	PART NO.	KICKSTARTER DESCRIPTION	EVO 80 JUNIOR
	1	22.05070.800	COMPLETE KICKSTARTER TECHNO.50	1
	2	13.48080.000	SPACER	1
	3	22.78250.000	KICKSTARTER SPRING RK6.50	1
	4	18.14620.800	STARTER GEAR RK6.50	1
	5	10.15120.800	STARTER SHAFT RK6.50	1
	6	22.14090.800	KICKSTARTER SLEEVE TECHNO.50	1
	7	27.61550.000	WASHER 14,3.20.1	1
	8	22.36570.000	CONICAL SPRING	1
	9	11.31020.000	SINTERED BUSH	1
	10	10.52010.000	OIL SEAL 14.22.4	1
	11	004.060008.200	KICKSTARTER COMPL. LEVER	1
	12	25.57945.800	KICK STARTER FIXING PLATE	1
	13	25.43910.000	KICK STARTER SLEEVE	1
	14	31.31050.000	SCREW 6.15	1
	15	18.67810.000	GEAR	1

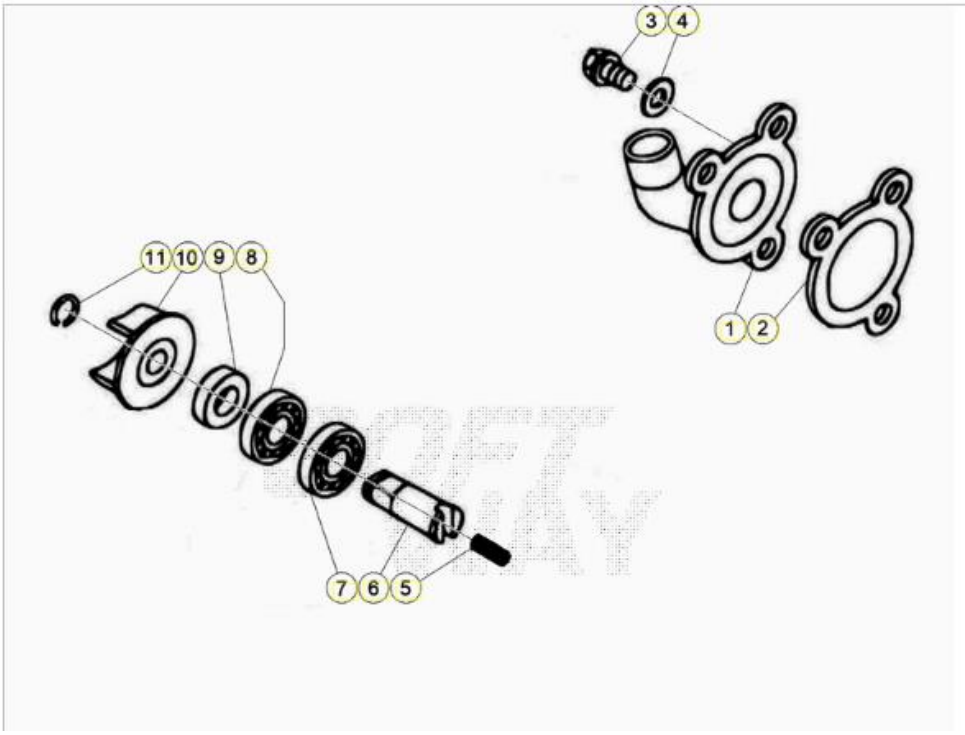

ORDER QTY	REF. NO.	PART NO.	WATER PUMP DESCRIPTION	EVO 80 JUNIOR
	1	12.67941.033	PUMP COVER, CR.65/MCH	1
	2	16.74930.000	CR65.MCH PUMP COVER GASKET	1
	3	31.30510.000	SCREW 6.30 TSPCE	1
	4	27.40490.000	WASHER 6.10.2	1
	5	22.36580.000	WATER PUMP SHAFT SPRING	1
	6	10.27752.000	WATER PUMP SHAFT	1

	7	12.93390.000	BALL BEARING 10.19.5	1
	8	12.93400.000	BALL BEARING 10.19.5	1
	9	10.44610.000	OIL SEAL 10.18.4	1
	10	31.21831.000	RK6.50 WATER PUMP FAN	1
	11	28.22660.000	SEEGER 9E	1

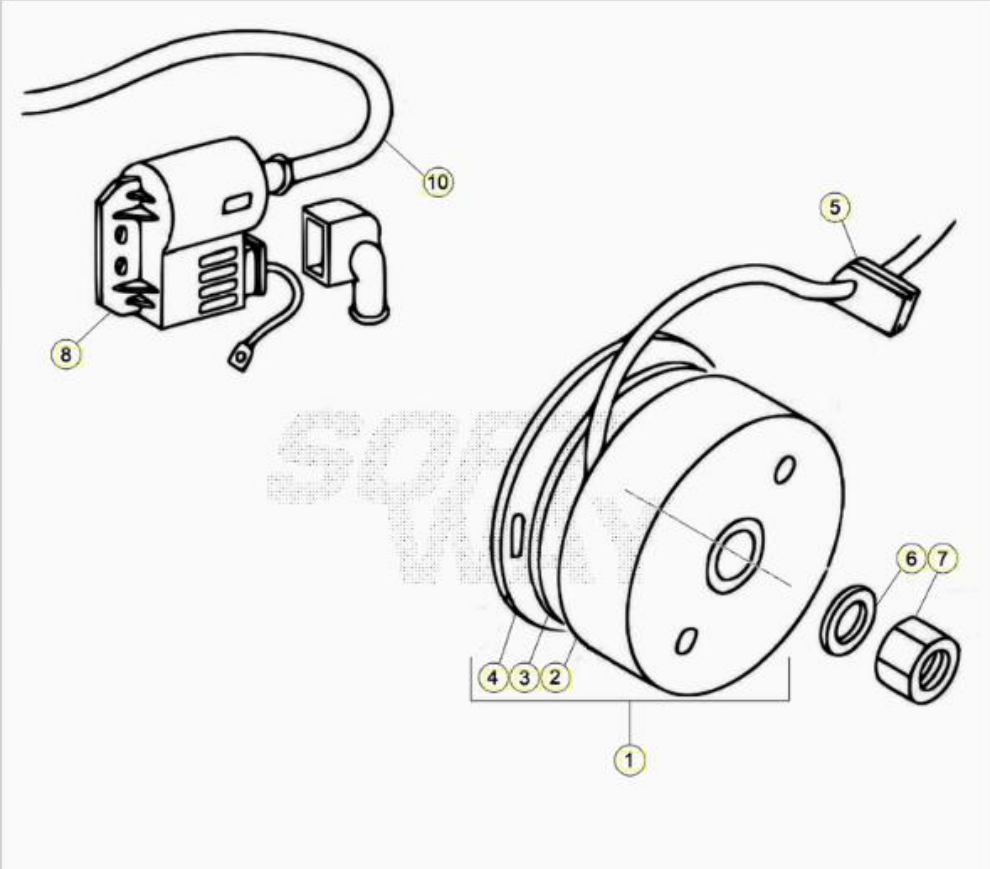

ORDER QTY	REF. NO.	PART NO.	ELECTRONIC IGNITION ASSY DESCRIPTION	EVO 80 JUNIOR
	1	31.03271.000	FLYWHEEL REV 80 '08	1
	2	27.00376.000	ROTOR ASSY	1
	3	28.97815.000	STATOR ASSY,EL. FLYWHEEL (3103271)	1
	4	25.60163.000	BACK PLATE (FOR STATOR)	1
	5	16.33553.000	GULDING.SLIT RUBBER REV80 FLYWHEEL	1
	6	27.52500.000	WASHER 10	1
	7	13.25100.000	SPECIAL NUT 10.1,25 CH 15	1
	8	11.20681.000	IGN COIL	1
	10	12.08280.000	COIL SCREENED CABLE	1

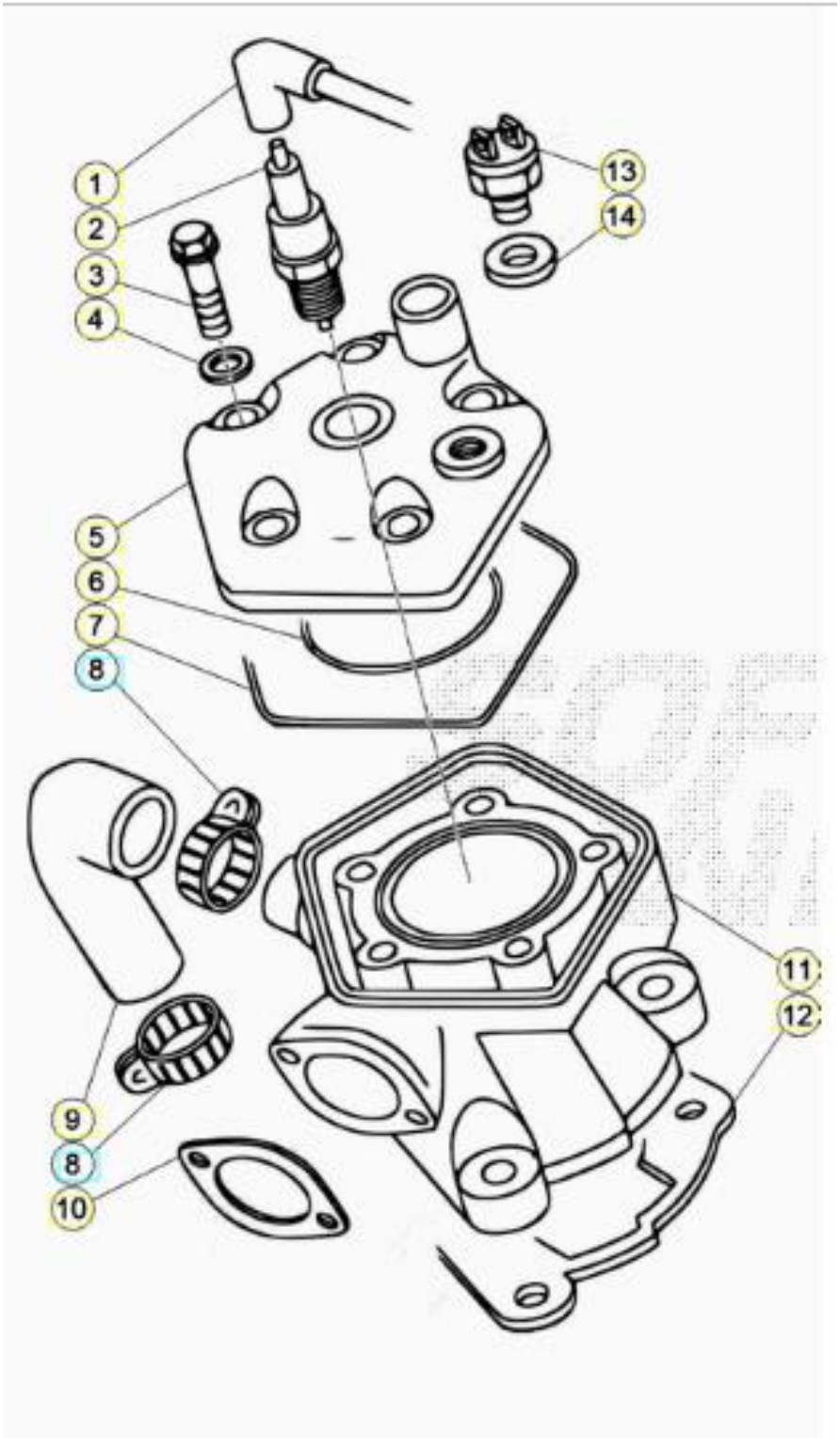

ORDER QTY	REF. NO.	PART NO.	CYLINDER DESCRIPTION	EVO 80 JUNIOR
	1	27.13514.000	SPARK PLUG PROTECTOR CR65.2001	1
	2	12.25200.000	S/S TO 12.25128.000	1
	2	12.25128.000	SPARK PLUG BR8ES	1
	3	11.52425.000	SPECIAL BOLT 7.33	1
	4	27.45100.000	WASHER 7.12.0,2	1
	5	29.12025.057	TR.80 HEAD D.48	1
	6	10.67050.000	OIL SEAL 51,50.1,78 VYTON 70SH	1
	7	10.66960.000	OIL SEAL .94,97.98,53.1,78	1

	8	15.15228.000	BAND 14/24 (VELOXBLOC)	2
	9	29.15910.000	RADIATOR HOSE	1
	10	16.80323.000	EXHAUST GASKET MINI MCH	1
	11	12.52463.057	CYLINDER, D.48 REV/EVO 80, 2° VERSION	1
	12	16.61750.000	CYLINDER GASKET	1
	13	29.11960.000	THERMOSTAT ZERO	1
	14	16.49500.000	GASKET 8.20.1,5	1

ORDER QTY	REF. NO.	PART NO.	CARBURETTOR COMPONENTS DESCRIPTION	EVO 80 JUNIOR
	1	12.05068.000	CARBURETOR PHBG 21, REV 80 REG. SPM	1
	2	15.15370.000	CLAMP 20/32	1
	3	27.23051.000	INLET MANIFOLD	1
	4	31.34510.000	SCREW 6.20	1
	5	31.02140.000	REED VALVE COMPLETE TECHNO	1
	6	25.59670.000	PETAL FIXING PLATE	2
	7	21.15360.000	VALVE PETAL 4M/PM	2
	8	16.92550.000	VALVE GASKET 4M/PM	1

ORDER QTY	REF. NO.	PART NO.	FRAME DESCRIPTION	EVO 80 SENIOR
	1	012.310028.051	FRAME	1
	2	25.98670.000	FORK STEERING BEARING PROTECTION RE	1
	3	12.98300.000	CONICAL BEARING 20.42.15	2
	4	25.98752.000	LOWER BEARING PROTECTION, REV/EVO 50/80	1

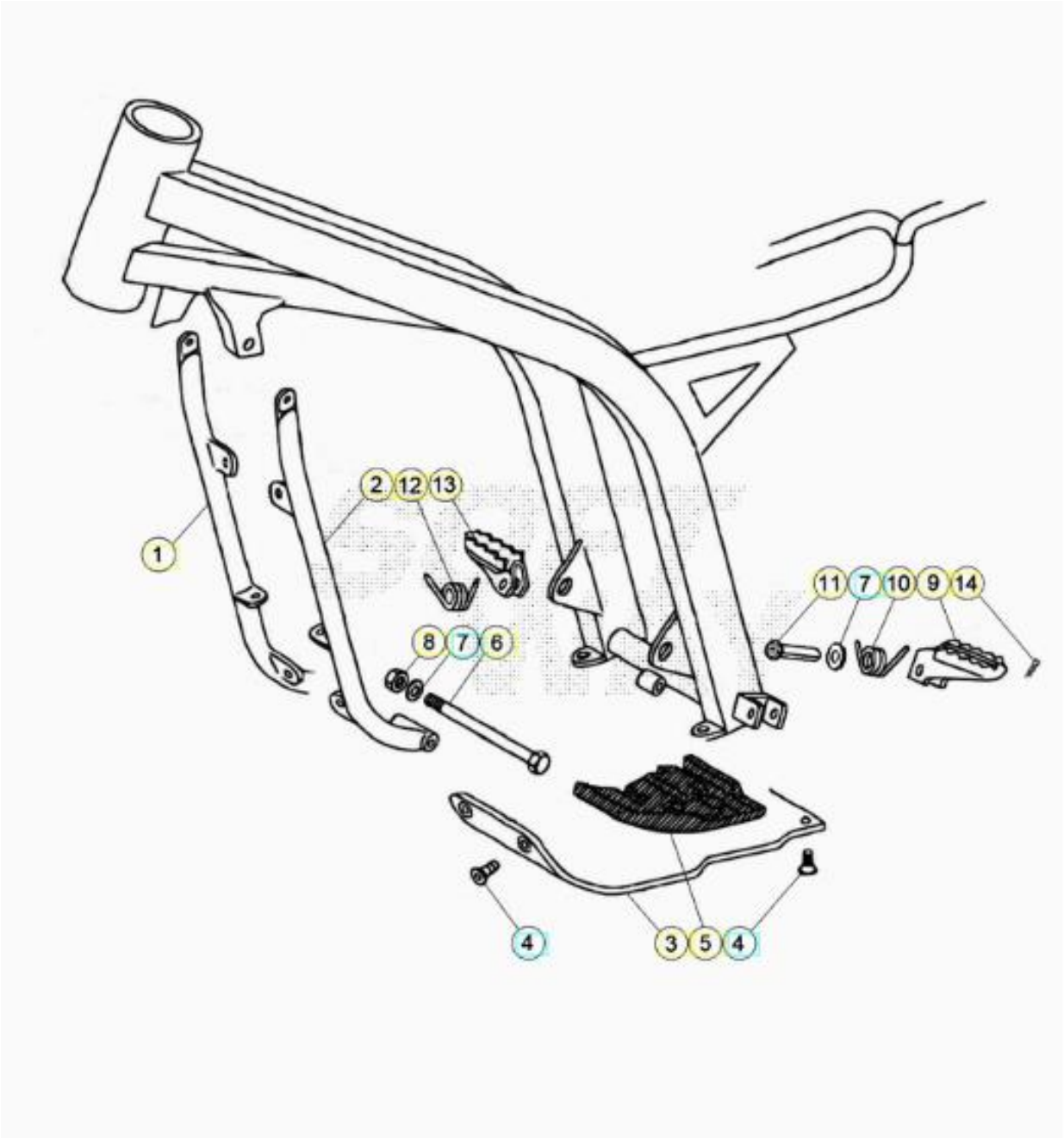

ORDER QTY	REF. NO.	PART NO.	FRAME ACCESSORIES DESCRIPTION	EVO 80 SENIOR
	1	012.320004.051	ENGINE SUPPORT	1
	2	032.311684.051	ENGINE SUPPORT	1
	3	12.32172.000	BUMPER, REV/EVO 80	1
	4	31.63930.000	SCREW 8.20	2
	5	16.23342.000	BUMPER RUPPER, REV 80	1
	6	11.57990.000	BOLT 8.180	1
	7	27.49500.000	WASHER 8.16	2
	8	13.17020.000	NUT 8, SELF.BLOCKING	1
	9	007.320910.000	LH FOOTPEG	1
	10	22.62020.000	FOOTREST SPRING	1
	11	25.54466.000	PIVOT PIN, FOOTREST RR 4T 125CC	1
	12	22.62010.000	FOOTREST SPRING	1

	13	007.320900.000	RH FOOTPEG	1
	14	12.81995.000	CLIP 2.15 INOX	1

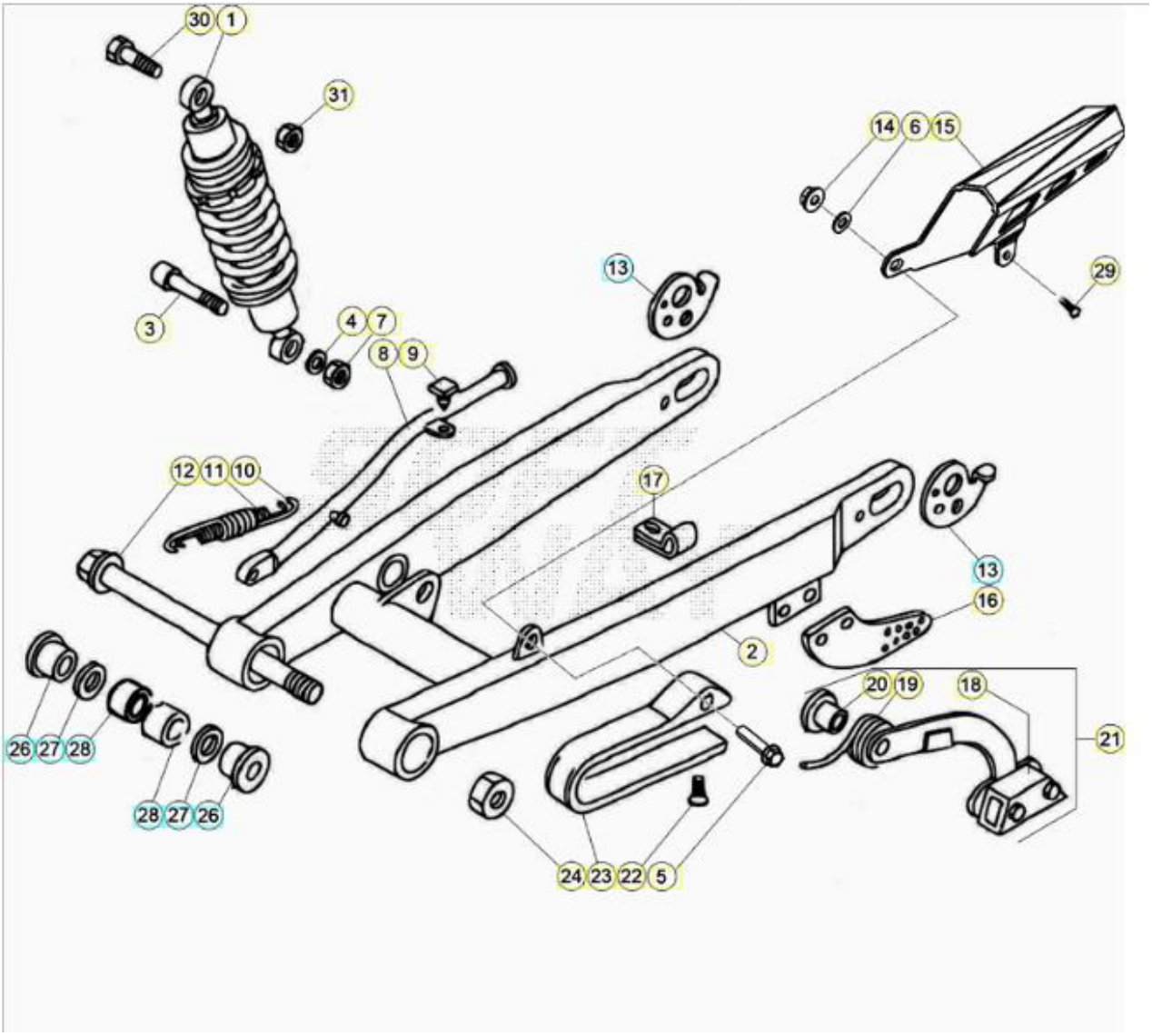

ORDER QTY	REF. NO.	PART NO.	REAR FORK DESCRIPTION	EVO 80 SENIOR
	1	012.330008.000	SHOCK ABSORBER	1
	2	012.330034.051	SWINGARM	1
	3	31.65510.000	SCREW TCCE 10.55	1
	4	27.54000.000	WASHER 10.21.2	1
	5	11.50360.000	BOLT 6.40 RS CH8	1
	6	12.94010.000	BALL BEARING 15.35.11	1
	7	13.19010.000	NUT 10, SELF.BLOCKING	1
	8	12.39972.000	STAND, REV 80	1
	9	16.29489.000	STAND RUBBER (REV 50/80)	1
	10	22.47022.000	SPRING, STAND OUTSER	1
	11	22.47019.000	INTERNAL RETURNING STAND SPRING	1

	12	25.55725.000	S/ARM SPINDLE REV 50	1
	13	29.11860.000	CHAIN TENSIONER TR.34/R	2
	14	13.13020.000	NUT 6, SELF.BLOCKING	1
	15	008.330501.059	EVO 4T BLACK CHAIN COVER	1
	16	25.98955.000	REAR SPROCKET PROTECTION	1
	17	15.14655.000	RUBBER CLAMP 8X16 HOLE 5,5	1
	18	16.22500.000	CHAIN TENS. BLOCK TR 34	1
	19	22.81111.000	SPRING	1
	20	13.46314.000	SPACER	1
	21	25.25970.000	SLIDING BLOCK	1
	22	31.30500.000	SCREW 6.12 TSPCE	1
	23	29.10093.052	SLIDING BLOCK	1
	24	13.21155.000	WHEEL NUT	1
	26	13.49201.000	SWINGING ARM SPACER REV 50/80	2
	27	10.41195.000	DUST RING	2
	28	11.22850.000	NEEDLE BEARING 20.26.12	2
	29	31.30080.000	SCREW 5.10	1
	30	11.62060.000	BOLT 10.50 1,25(10.9)	1
	31	13.21060.000	NUT, M10X1,25 H.8.5 14MM SELF.LOCKI	1

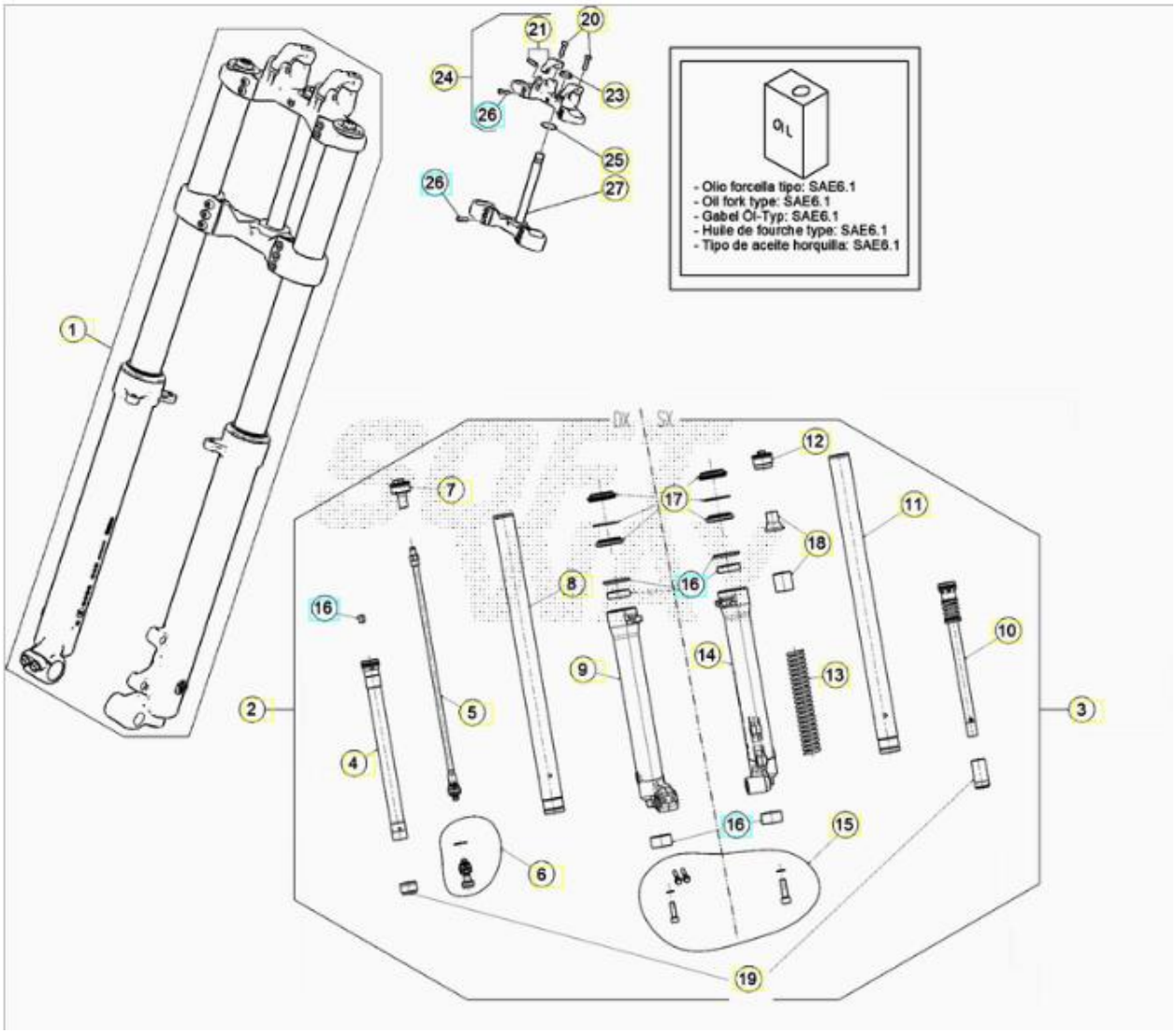

ORDER QTY	REF. NO.	PART NO.	FRONT FORK DESCRIPTION	EVO 80 SENIOR
	1	012.340358.251	FRONT FORK ASSY EVO 2T 80 SENIOR MY19	1
	2	012.340138.051	RIGHT FORK LEG	1
	3	012.340148.051	LEFT FORK LEG	1
	4	007.349260.000	RH HIDRAULIC FORK SPARES	1
	5	007.349280.000	EXTENSION PACK ASSEMBLY	1
	6	007.349300.000	COMPRESSION PACK ASSEMBLY	1
	7	007.349310.000	RIGHT CAP	1
	8	007.349480.000	RIGHT SLIDER ASSY	1
	9	007.340244.051	RIGHT SLEEVE	1
	10	007.349360.000	LEFT HIDRAULIC FORK SPARES	1
	11	007.349490.000	LEFT SLIDER ASSY	1
	12	007.349190.000	LH FORK CAP	1
	13	012.340060.000	FORK SPRING	1
	14	007.340234.051	LEFT SLEEVE	1
	15	007.349220.000	SCREWS KIT	1
	16	007.349230.000	BUSHING KIT	3

	17	007.349240.000	FORK SEALS S/S TO AB.12120.38	1
	18	012.340150.000	SPACER . KIT	1
	19	007.349400.000	HYDRAULIC SEALS KIT	1
	20	31.63911.000	SCREW 8.35, DIN 7984	1
	21	007.340558.259	HANDLEBAR UBOLT KIT	1
	23	007.340050.000	EVO FORK LOWER YOKE NUT	1
	24	007.343208.259	TRIPLE CLAMP, BLK	1
	25	10.66301.000	OIL SEAL 17,96.2,62	1
	26	31.34510.000	SCREW 6.20	2
	27	007.343108.259	LOWER TRIPLE CLAMP W/ STEM	1

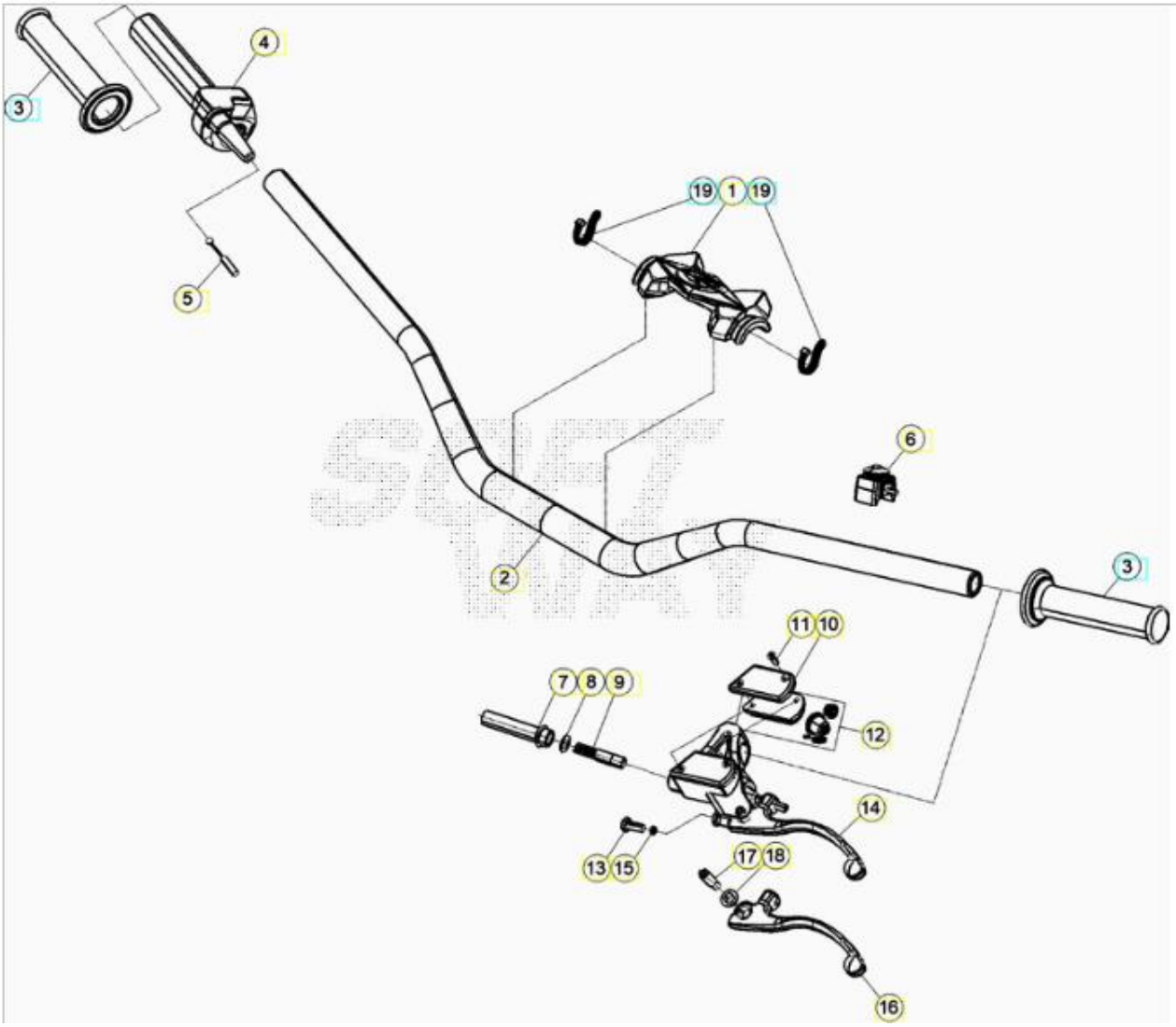

ORDER QTY	REF. NO.	PART NO.	CONTROLS HANDLEBARS DESCRIPTION	EVO 80 SENIOR
	1	007.350660.000	HANDLEBAR PROTECTION	1
	2	032.350020.059	HANDLEBAR, RACING REV3.EVO	1
	3	22.18531.000	GRIPS (PAIR) REV 3	2
	4	12.55091.000	TWIST GRIP	1
	5	29.21977.052	S/S TO 032.350868.200	1

	5	032.350868.200	GAS TRASMISSION	1
	6	012.400010.000	STOP SWITCH	1
	7	004.350200.000	CLUTCH HOSE	1
	8	16.50510.000	GASKET 10.15.1 COPPER	1
	9	20.05083.800	PISTON KIT X PUMP ASSY (2102058/210	1
	10	12.68106.052	CLUTCH PUMP COVER	1
	11	31.23410.052	SCREW	1
	12	20.05074.000	OIL SEAL COVER FOR PUMP 21.02428	1
	13	31.88601.000	FRONT LEVER ADJUSTING SCREW	1
	14	012.350018.052	CLUTCH LEVER	1
	15	22.38701.000	BRAKE/CLUTCH LEVER ADJUSTING SPRING	1
	16	21.27084.000	CLUTCH LEVER ONLY (21.02428)	1
	17	31.96818.000	SCREW	1
	18	11.26465.000	BUSH FOR LEVER	1
	19	15.13020.000	BLACK CLAMP L.100	2

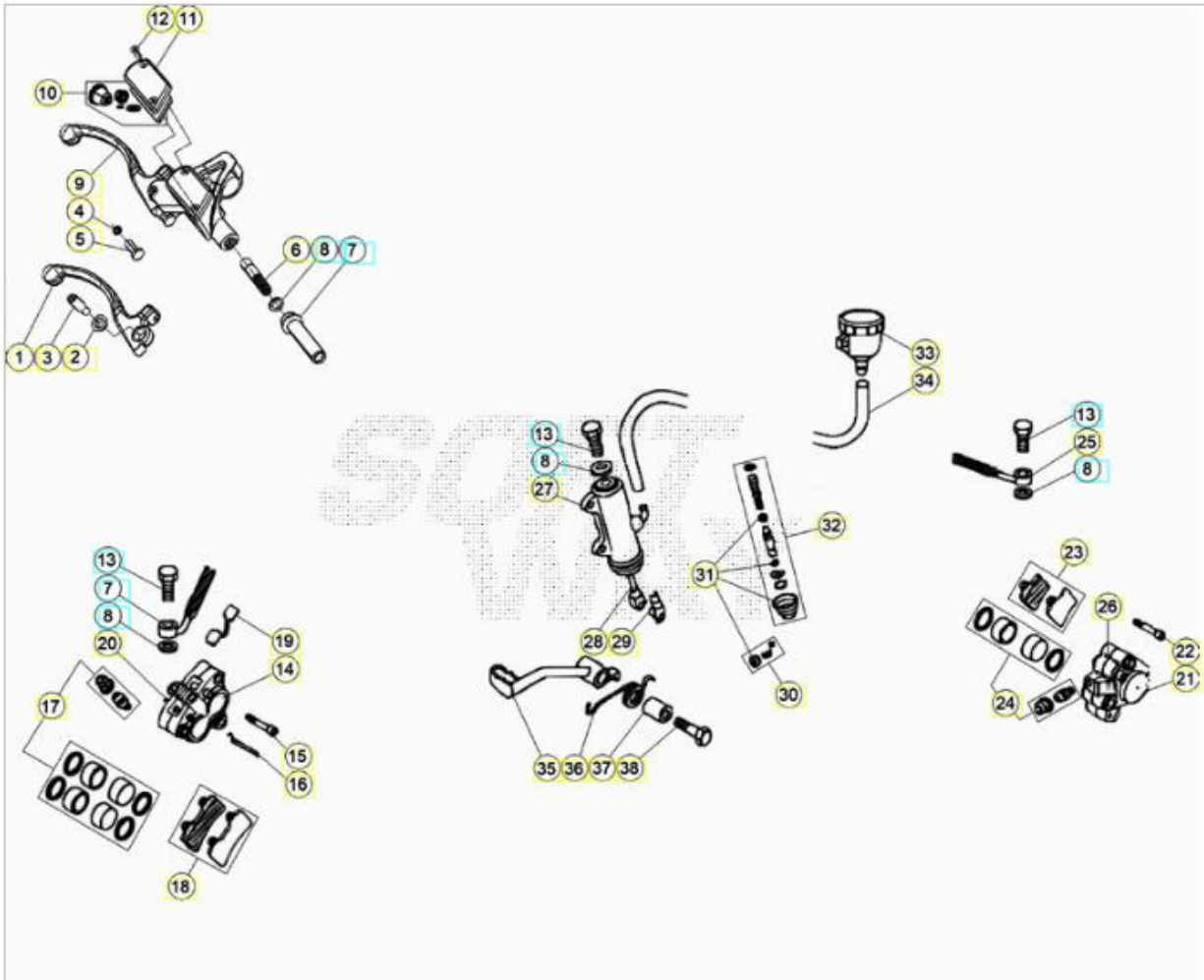

ORDER QTY	REF. NO.	PART NO.	HYDRALIC BRAKE SYSTEM DESCRIPTION	EVO 80 SENIOR
	1	21.27103.000	FRONT BRAKE LEVER ONLY (2102058)	1
	2	11.26465.000	BUSH FOR LEVER	1

	3	31.96818.000	SCREW	1
	4	22.38701.000	BRAKE/CLUTCH LEVER ADJUSTING SPRING	1
	5	31.88601.000	FRONT LEVER ADJUSTING SCREW	1
	6	20.05083.800	PISTON KIT X PUMP ASSY (2102058/210	1
	7	29.09123.000	FRONT BRAKE HOSE, REV 3 '05	2
	8	16.50510.000	GASKET 10.15.1 COPPER	4
	9	012.360038.052	FRONT BRAKE LEVER	1
	10	20.05075.000	OIL SEAL COVER FOR PUMP 21.02058	1
	11	12.68107.052	BRAKE PUMP COVER	1
	12	31.23410.052	SCREW	1
	13	11.65040.000	SPECIAL BOLT	3
	14	032.360018.059	BRAKE PLIERS	1
	15	11.70521.000	BOLT	1
	16	22.32206.000	S/S TO 22.32205.000	1
	16	22.32205.000	BRAKE PADS SPRING FOR PLIERS	1
	17	20.02714.000	PISTON & OIL SEAL KIT FOR PLIERS 25	1
	18	25.25352.000	BRAKE PADS, REV3	1
	19	25.98915.000	REV.3 BRAKE PLIERS PROTECTION PADS	1
	20	31.96801.000	SPECIAL SCREW	1
	21	032.360550.059	PLIERS, REAR BRAKE	1
	22	11.70520.000	BOLT	1
	23	25.25373.000	BRAKE PADS, 2503086/68	1
	24	20.02722.000	PISTON & OIL SEAL KIT FOR PLIERS 25	1
	25	29.09135.000	REV/EVO 80 REAR BRAKE DISK TUBE	1
	26	31.96825.000	SPECIAL SCREW	1
	27	25.91188.000	REAR BRAKE POMP, REV 3 '06	1
	28	10.84091.000	REAR BREKE ROD	1
	29	28.93130.000	PUMP PIN W/SPRING	1
	30	27.23424.000	REAR PUMP 90° RACCORD HOLE D=3	1
	31	20.08262.000	KIT (SPARE.PARTE)BRAKE PUMP 25.9118	1
	32	20.08257.000	BRAKE PUMP PISTON ASSY S/S TO 012.360048.200	1
	33	28.05100.000	BRAKE OIL TANK	1
	34	012.360001.400	OIL TUBE	1
	35	25.28096.000	PEDAL BRAKE REV/EVO 80	1
	36	22.80510.000	SPRING	1
	37	11.31031.000	SINTERED BUSH 14.18.15	1
	38	11.55450.000	BOLT 8.30	1

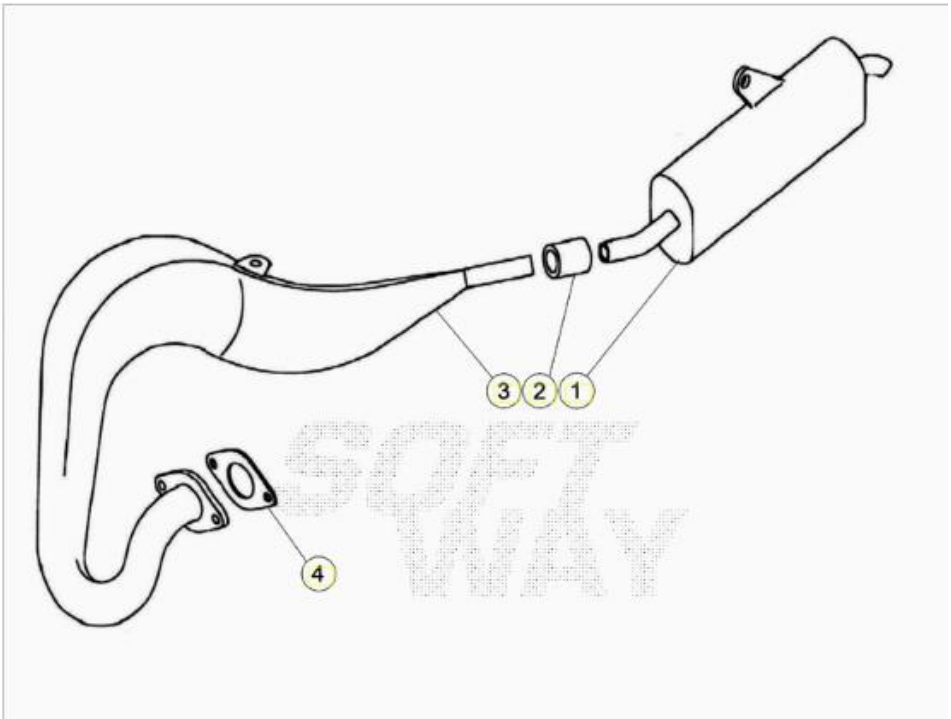

ORDER QTY	REF. NO.	PART NO.	EXHAUST SYSTEM DESCRIPTION	EVO 80 SR
	1	28.91790.000	SILENCER REV 50.80 '07	1
	2	22.12120.000	S/S TO 024.370520.000	1
	2	024.370520.000	RUBBER SLEEVE	1
	3	22.03344.000	REV 80 MUFFLER	1
	4	16.80323.000	EXHAUST GASKET MINI MCH	1

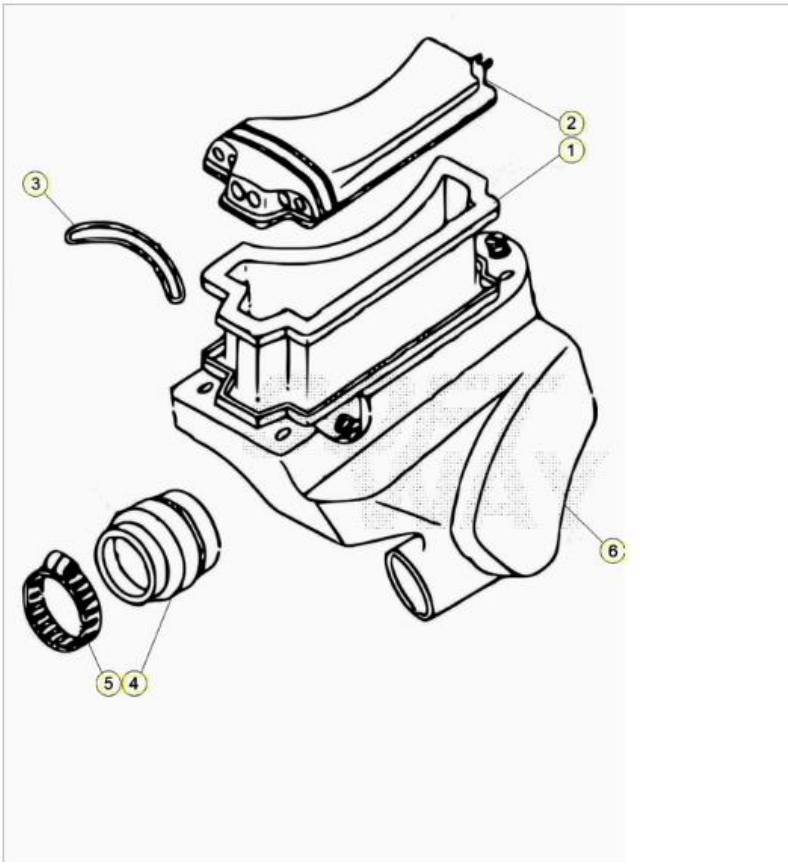

ORDER QTY	REF. NO.	PART NO.	AIR BOX DESCRIPTION	EVO 80 SR

	1	15.25205.000	AIR FILTER REV/EVO 50	1
	2	12.73181.000	FILTER COVER, REV.50	1
	3	14.40040.000	ELASTIC	1
	4	22.13576.000	RUBBER MANIFOLD REV/EVO 80 AIR FILTER B	1
	5	15.15360.000	CLAMP 25/45	1
	6	28.12693.000	AIR FILTER BOX REV 80	1

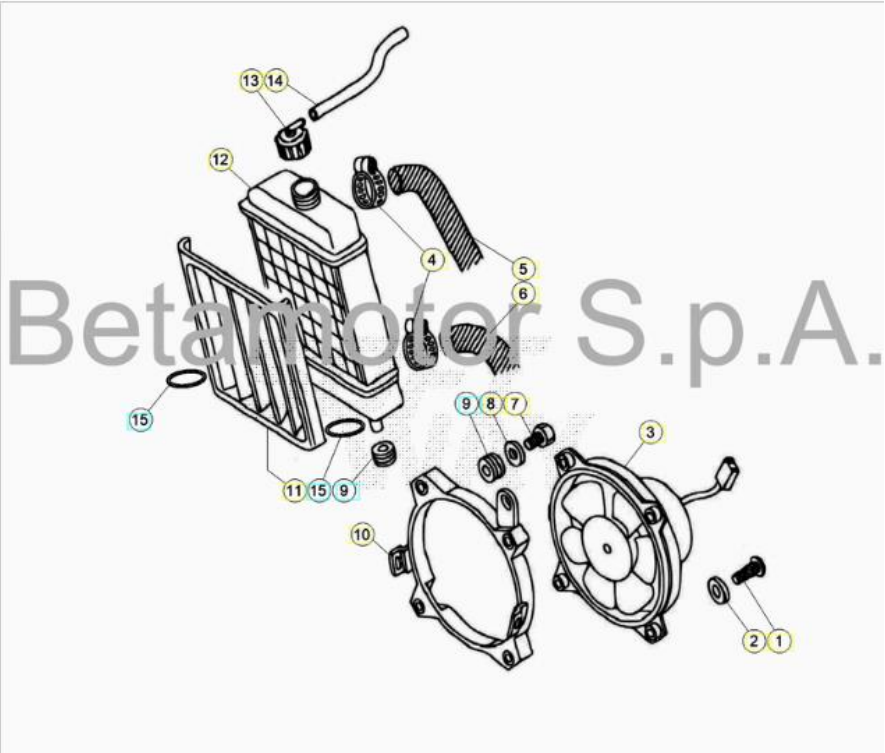

Betamotor S.p.A.

ORDER QTY	REF. NO.	PART NO.	COOLING SYSTEM DESCRIPTION	EVO 80 SENIOR
	1	31.27510.000	SCREW 4.20	1
	2	27.34650.000	WASHER 4.9	1
	3	14.01040.000	ELECTRIC FAN	1
	4	15.15230.000	CLAMP 15/25	1
	5	29.15736.000	REV 80 RADIATOR TUBE	1
	6	29.15735.000	REV 80 RADIATOR TUBE	1
	7	11.46251.000	BOLT 5,12	1
	8	27.36500.000	WASHER 5.15	1
	9	28.91500.000	SILENT BLOCK	2
	10	28.98012.059	ELECTRIC FAN BRACKET REV 50	1
	11	16.45538.159	RADIATOR GRIL, REV 50/80 '04 .BLACK	1
	12	27.23642.000	RADIATOR REV/EVO 50/80	1
	13	29.01821.000	WATER TANK COVER	1
	14	012.390001.400	BREATHER TUBE	1
	15	10.66680.000	OIL SEAL 28,25.33,49.2,62	2

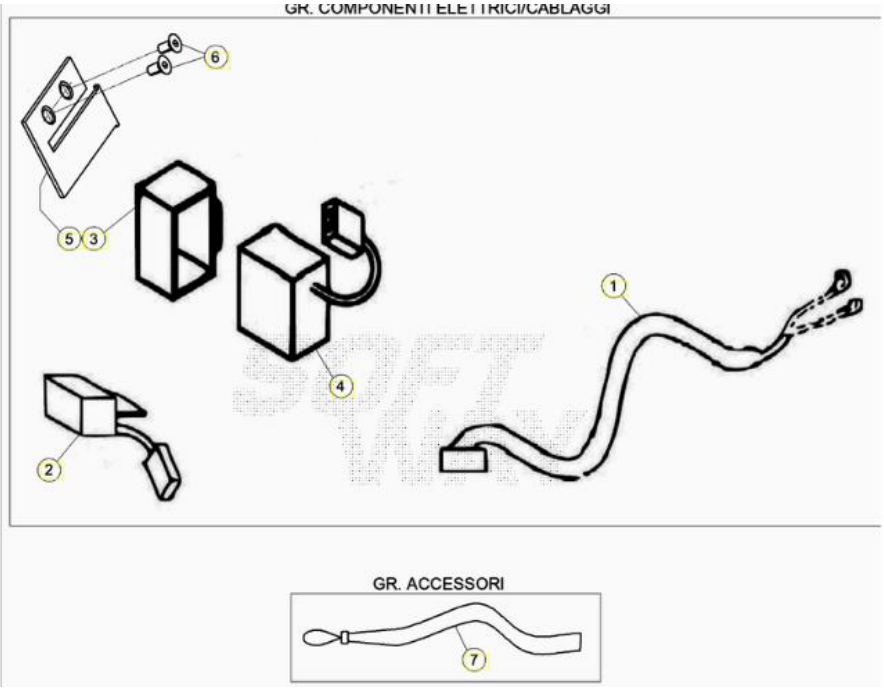

ORDER QTY	REF. NO.	PART NO.	ELECTRICAL EQUIPMENT DESCRIPTION	EVO 80 SR
	1	18.01851.000	ELECTRIC EQUIPMENT	1
	2	27.28092.000	REGULATOR, REV 3 2002	1
	3	16.23325.000	CDI UNIT CUSHION	1
	4	12.41831.000	CDI UNIT, REV/EVO 50/80	1
	5	28.95334.000	CDI FIXATION BRACKET REV80 '08	1
	6	31.30500.000	SCREW 6.12 TSPCE	1
	7	007.400360.000	KILL SWITCH WITH WRIST LANYARD	1

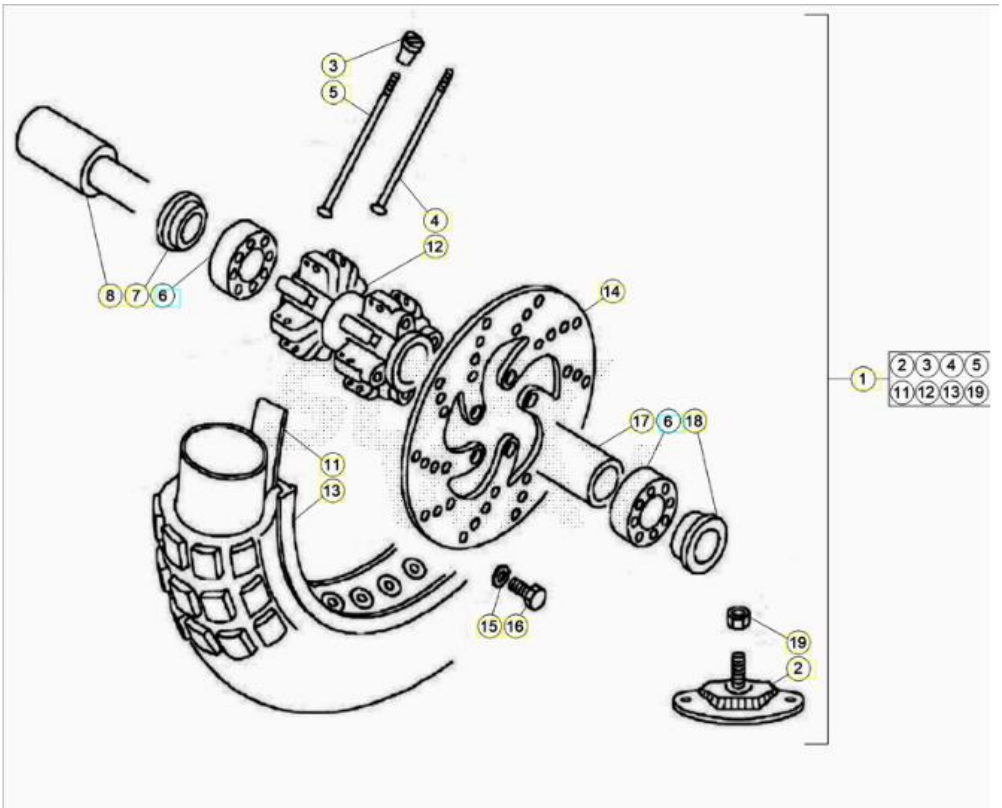

ORDER	REF.	PART NO.	WHEEL . FRONT	EVO 80

QTY	NO.		DESCRIPTION	SENIOR
	1	012.410210.000	WHEEL EVO 2T 80 SENIOR	1
	2	15.17500.000	TIRE FASTENER	1
	3	23.10100.000	NIPPLE	1
	4	27.24192.000	SPOKE 3,0 X 254 C.169 C.2,1	1
	5	27.24193.000	SPOKE 3,0 X 256 C.169 C.2,1	1
	6	12.97900.000	BALL BEARING 20.37.9	2
	8	007.410300.000	FRONT WHEEL PIN	1
	11	15.38200.000	BEAD 21.25	1
	12	007.410158.059	HUB	1
	13	12.42531.000	RIM MONRAD 21.1,6 .32	1
	14	13.39279.000	FRONT BRAKE DISK REV 3 / REV 4T '07	1
	15	27.57510.000	WASHER TR.89	1
	16	11.49513.000	S/S TO 11.49510.000	1
	16	11.49510.000	BOLT 6.25	1
	17	007.410030.000	INNER REAR HUB SPACER	1
	18	13.62251.000	SPACER	1
	19	13.17120.000	NUT M8	1
	20	22.31980.000	CUP SPRING TR.98	2

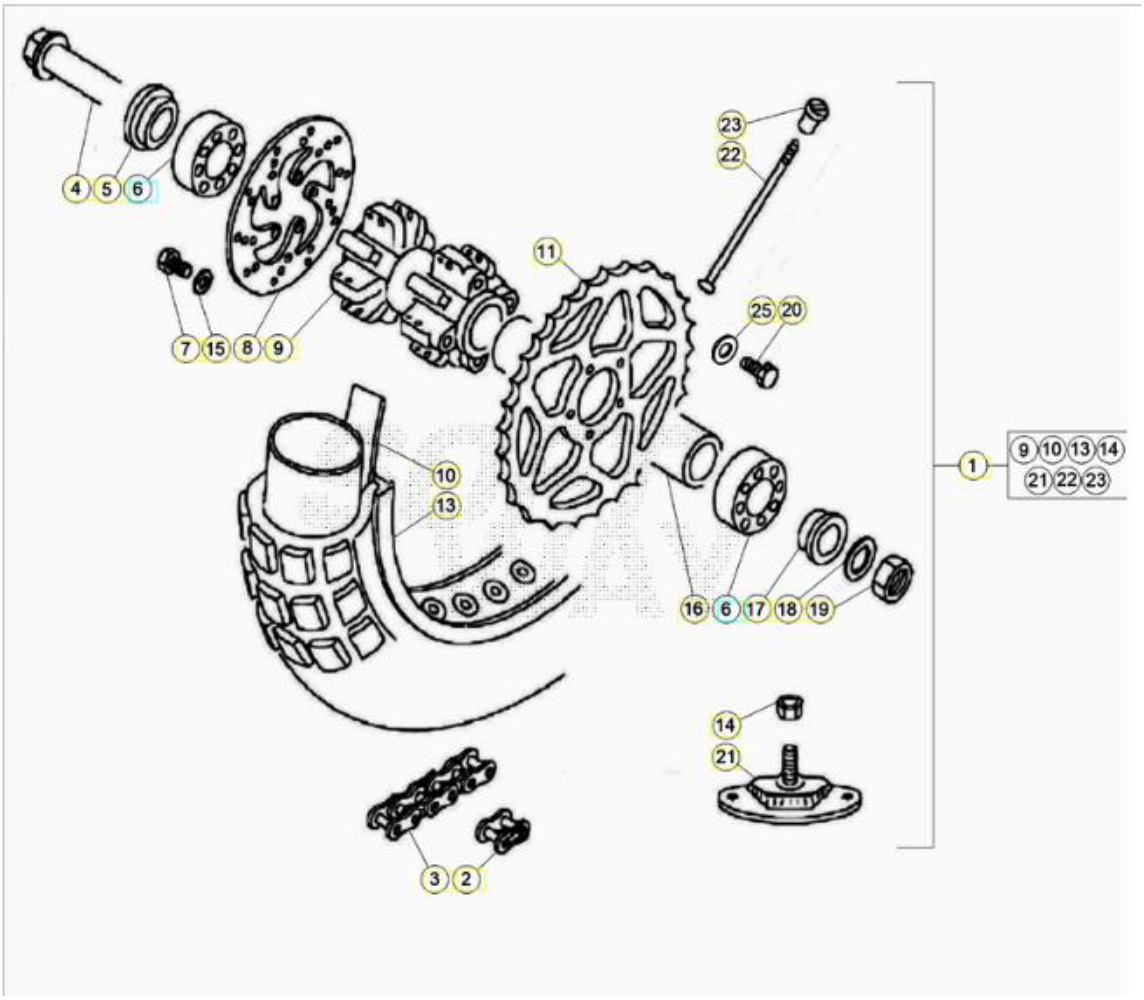

ORDER QTY	REF. NO.	PART NO.	WHEEL . REAR DESCRIPTION	EVO 80 SENIOR
	1	012.420160.000	WHEEL EVO 2T 80 SENIOR	1
	2	012.420150.000	CHAIN LINK	1
	3	012.420130.000	CHAIN	1
	4	25.55764.000	REAR WHEEL AXLE, REV 3 2007	1
	5	13.87774.000	REAR HUB SPACER, TRIAL 4T	1
	6	12.98010.000	BALL BEARING 20.42.12	2
	7	11.48025.000	BOLT 6.16	1
	8	13.39316.000	REAR BRAKE DISK REV 4T '07	1
	9	012.420108.059	WHEEL HUB	1
	10	15.36000.000	BEAD 17/18.25	1
	11	12.89588.000	REAR SPROCKET, Z.60	1
	13	012.420073.200	REAR RIM	1
	15	13.17123.000	NUT M8, (DIN 6927)	1
	16	012.420120.000	SPACER	1
	17	13.85774.000	REAR HUB SPACER REV 80 '08	1
	18	27.71210.000	WASHER 17,2 . 33 . 3	1
	19	13.29602.000	NUT, 16.1,5	1
	20	31.64032.000	SCREW 8.20	1
	21	27.24203.000	SPOKE 3,5 X 214 C.164 C.2,1	1
	22	27.24204.000	SPOKE 3,5 X 222 C.169 C.2,1	1
	23	23.10110.000	NIPPLE	1
	26	27.57510.000	WASHER TR.89	1

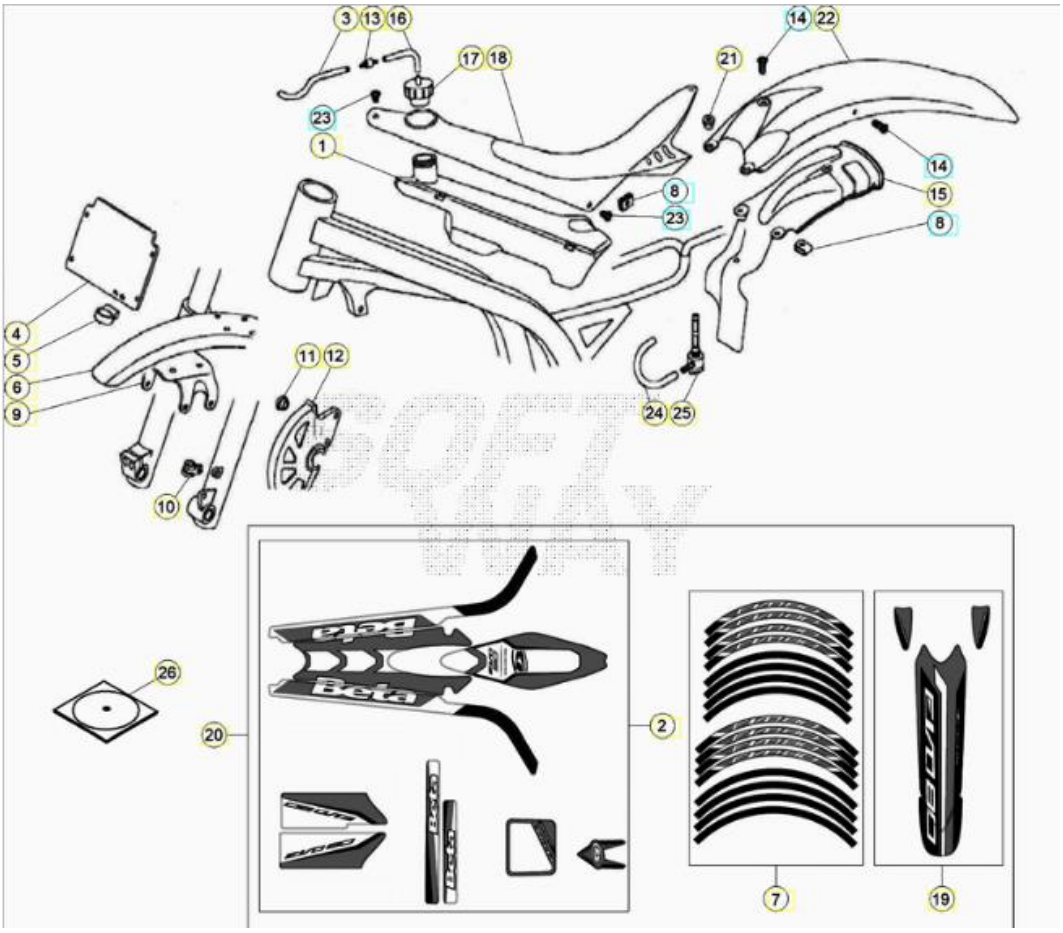

ORDER QTY	REF. NO.	PART NO.	DECALS . PLASTICS DESCRIPTION	EVO 80 SENIOR
	1	28.06071.000	FUEL TANK REV 50/80	1
	2	15.01823.097	FRONT LIGHT, REV80 '08	1
	3	012.430271.400	BREATHER TUBE	1
	4	22.28697.197	HEADLIGHT HOLDER	1
	5	31.29880.000	TTLIC SCREW 5.25	1
	6	007.430101.059	FRONT MUDGUARD, 2018 EVO 80 SR	1
	7	012.430410.000	RIMS DECALS EVO 2T 80 MY20	1
	8	25.60310.000	PLATE, FIXING M6	2
	9	012.430428.200	COMPLETE DECAL GROUP EVO 2T 80 MY20	1
	10	15.14655.000	RUBBER CLAMP 8X16 HOLE 5,5	1
	12	007.430373.759	FRONT DISK COVER	1
	13	031.430050.000	RESERVOIR BREATHER	1
	14	31.30520.000	SCREW 6.16	1
	15	25.24655.859	WHEEL HOUSE REV 80 '08 .ASSY.	1
	16	012.430281.400	BREATHER TUBE	1
	17	29.00525.059	GAS CAP	1
	18	032.430561.097	FUEL TANK COVER	1
	19	012.430398.200	FENDER DECAL EVO 2T 80 MY20	1
	20	012.430438.200	DECALS . FULL SET EVO 2T 80 MY20	1

	21	13.62000.000	SPACER	1
	22	25.19582.159	REAR FENDER, EVO 80	1
	24	012.430051.400	GASOLINE TUBE	1
	25	27.81083.000	PETCOCK REV 50/80	1
	26	012.440120.000	OWNER'S MANUAL CD EVO 2T 80	1
	27	13.54820.000	SPACER 6,5/9,0/13,5 . 4,8	1
	28	31.30570.000	SCREW 6.20	2
	29	31.30571.000	SCREW TTLIC 6.25 HEAD 12	1
	30	13.54830.000	SPACER 6,5 . 9/13 . 10,5/11,7	1